Technical Data Sheet
Electric Motor Three phase in Aluminum IE2

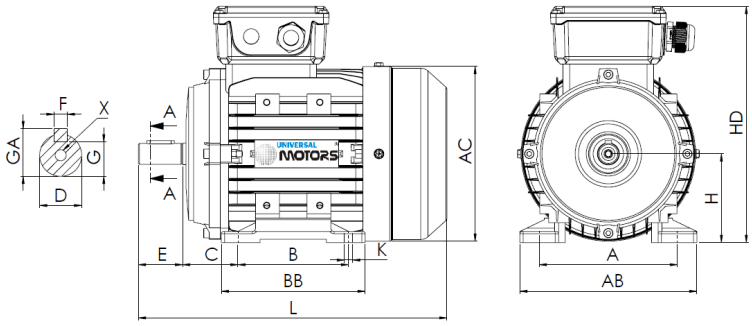

L (standard motor)
198

L (motor w/brake)
NA

L (motor w/forced ventilation)
NA

L (motor without ventilation)
165

Feet					Shaft						Carcass				Flange				
H	A	B	C	K	D	E	F	G	GA	X	AB	BB	AC	HD	M	N	P	S	T
56	90	71	36	5.8	9j6	20	3	7.2	10.2	M3x9	110	89	117	158	-	-	-	-	-

Electrical Data

Type	HE31/UMHA* 56M2-2	
Poles	2/3000	Poles
Power	0.12	Kw
Voltage	400	V
Frequency	50	Hz
Speed	2670	rpm
Nominal current	0.41	A
Power factor	0.77	
Efficiency 100%	53.6	%
Efficiency 75%	51.8	%
Efficiency 50%	44.9	%
Torque	0.43	N.m
Ta/Tn	2.3	
Ia/In	4.0	
Tm/Tn	2.3	

Mechanical Data

Shaft height	56	
Construction form	B3	
Mechanical protection	55	
Heating class	B	
Insulation class	F	
Service	S1	
Ambient temp.	-10ºC-40ºC	
Altitude	1000	
Noise	66	dB(A)
Weight	2.9	kg
Bearing DE	6201 2Z C3	
Bearing NDE	6201 2Z C3	

Extra Data

Applicable brakes

DC brake	NA	Brake torque	NA	N.m
AC brake	NA	Brake torque	NA	N.m

Applicable forced ventilations

Single-phase forced ventilation	Power	NA	W
Three-phase forced ventilation	Power	NA	W

Universal Motors S.A.
Rua Comendador Brandão, 484
4495-375 Póvoa de Varzim
geral@universalmotors.pt
TEL.: 252 299 080

Universal Motors UK, Ltd
Unit E2, Meltham Mills Road
West Yorkshire HD9 4AR
enquiries@universalmotors-group.co.uk
TEL.: +44(0) 1484660222

Universal Motors SL
C/La Habana n.6 nave 4 Pl Camporroso
28806 Alcala de Henares
info@universalmotors-group.es
TEL.: 918 864 213