Technical Data Sheet
Electric Motor Three phase in Cast Iron IE1

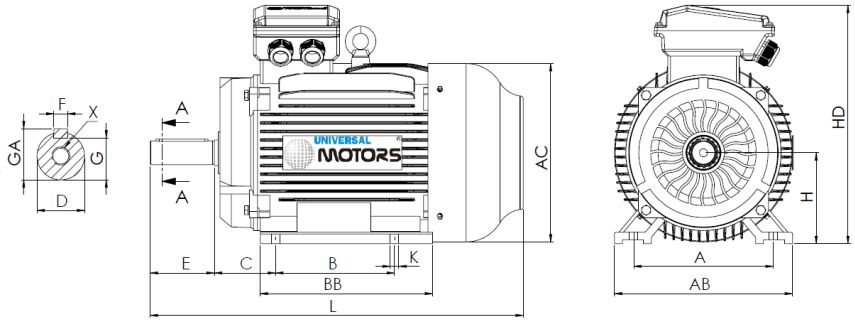

L (standard motor)
305

L (motor w/brake)
405

L (motor w/forced ventilation)
410

L (motor without ventilation)
295

Feet					Shaft						Carcass				Flange				
H	A	B	C	K	D	E	F	G	GA	X	AB	BB	AC	HD	M	N	P	S	T
80	125	100	50	10	19j6	40	6	15.5	21.5	M6x16	165	130	158	220	-	-	-	-	-

Electrical Data

Type	EM30 80M1-2	
Poles	2/3000	Poles
Power	0.75	Kw
Voltage	400	V
Frequency	50	Hz
Speed	2840	rpm
Nominal current	1.74	A
Power factor	0.83	
Efficiency 100%	75.0	%
Efficiency 75%	-	%
Efficiency 50%	-	%
Torque	2.52	N.m
Ta/Tn	2.2	
Ia/In	6.1	
Tm/Tn	2.3	

Mechanical Data

Shaft height	80	
Construction form	B3	
Mechanical protection	55	
Heating class	B	
Insulation class	F	
Service	S3-70%	
Ambient temp.	-10ºC-40ºC	
Altitude	1000	
Noise	67	dB(A)
Weight	16	kg
Bearing DE	6204 2Z C3	
Bearing NDE	6204 2Z C3	

Extra Data

Applicable brakes

DC brake	REB-05-08	Brake torque	8	N.m
AC brake	AC3	Brake torque	16	N.m

Applicable forced ventilations

Single-phase forced ventilation	Power	45	W
Three-phase forced ventilation	Power	45	W

Universal Motors S.A.
Rua Comendador Brandão, 484
4495-375 Póvoa de Varzim
geral@universalmotors.pt
TEL.: 252 299 080

Universal Motors UK, Ltd
Unit E2, Meltham Mills Road
West Yorkshire HD9 4AR
enquiries@universalmotors-group.co.uk
TEL.: +44(0) 1484660222

Universal Motors SL
C/La Habana n.6 nave 4 Pl Camporroso
28806 Alcala de Henares
info@universalmotors-group.es
TEL.: 918 864 213