Technical Data Sheet
Electric Motor Three phase in Cast Iron IE1

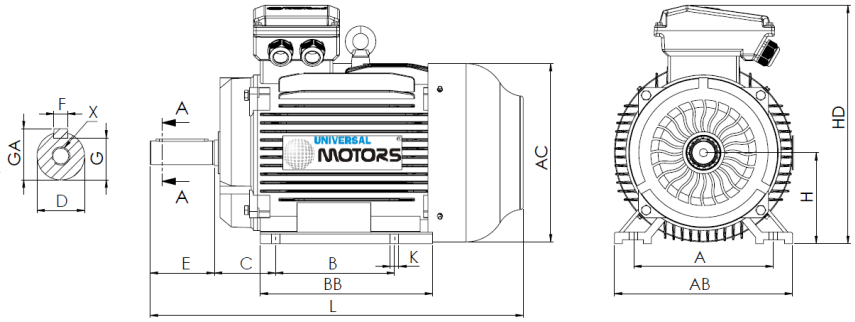

L (standard motor)
410

L (motor w/brake)
525

L (motor w/forced ventilation)
510

L (motor without ventilation)
390

Feet					Shaft						Carcass				Flange				
H	A	B	C	K	D	E	F	G	GA	X	AB	BB	AC	HD	M	N	P	S	T
100	160	140	63	12	28j6	60	8	24	31	M10x22	205	175	198	270	-	-	-	-	-

Electrical Data

Type	EM30 100L2-8	
Poles	8/750	Poles
Power	1.10	Kw
Voltage	400	V
Frequency	50	Hz
Speed	680	rpm
Nominal current	3.20	A
Power factor	0.69	
Efficiency 100%	72.0	%
Efficiency 75%	-	%
Efficiency 50%	-	%
Torque	15.45	N.m
Ta/Tn	1.8	
Ia/In	5.0	
Tm/Tn	2	

Mechanical Data

Shaft height	100	
Construction form	B3	
Mechanical protection	55	
Heating class	B	
Insulation class	F	
Service	S3-70%	
Ambient temp.	-10ºC-40ºC	
Altitude	1000	
Noise	59	dB(A)
Weight	31	kg
Bearing DE	6206 2Z C3	
Bearing NDE	6206 2Z C3	

Extra Data

Applicable brakes

DC brake	REB-05-12	Brake torque	32	N.m
AC brake	AC5	Brake torque	40	N.m

Applicable forced ventilations

Single-phase forced ventilation	Power	65	W
Three-phase forced ventilation	Power	65	W

Universal Motors S.A.
Rua Comendador Brandão, 484
4495-375 Póvoa de Varzim
geral@universalmotors.pt
TEL.: 252 299 080

Universal Motors UK, Ltd
Unit E2, Meltham Mills Road
West Yorkshire HD9 4AR
enquiries@universalmotors-group.co.uk
TEL.: +44(0) 1484660222

Universal Motors SL
C/La Habana n.6 nave 4 Pl Camporroso
28806 Alcala de Henares
info@universalmotors-group.es
TEL.: 918 864 213