Technical Data Sheet
Electric Motor Three phase in Cast Iron IE2

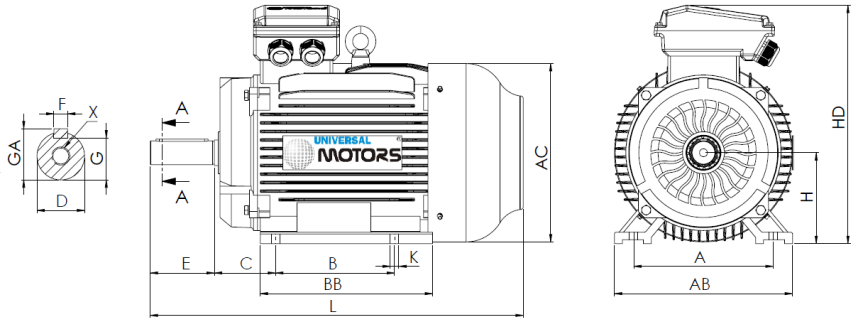

L (standard motor)
515

L (motor w/brake)
660

L (motor w/forced ventilation)
620

L (motor without ventilation)
488

Feet					Shaft						Carcass				Flange				
H	A	B	C	K	D	E	F	G	GA	X	AB	BB	AC	HD	M	N	P	S	T
132	216	178	89	12	38k6	80	10	33	41	M12x28	270	225	259	349	-	-	-	-	-

Electrical Data

Type	HE30 132M2-6	
Poles	6/1000	Poles
Power	5.50	Kw
Voltage	400	V
Frequency	50	Hz
Speed	965	rpm
Nominal current	12.30	A
Power factor	0.75	
Efficiency 100%	86.0	%
Efficiency 75%	86.5	%
Efficiency 50%	85.1	%
Torque	54.43	N.m
Ta/Tn	2	
Ia/In	6.8	
Tm/Tn	2.1	

Mechanical Data

Shaft height	132	
Construction form	B3	
Mechanical protection	55	
Heating class	B	
Insulation class	F	
Service	S3-70%	
Ambient temp.	-10ºC-40ºC	
Altitude	1000	
Noise	69	dB(A)
Weight	87	kg
Bearing DE	6308 2Z C3	
Bearing NDE	6308 2Z C3	

Extra Data

Applicable brakes

DC brake	REB-05-16	Brake torque	80	N.m
AC brake	AC7	Brake torque	90	N.m

Applicable forced ventilations

Single-phase forced ventilation	Power	55	W
Three-phase forced ventilation	Power	55	W

Universal Motors S.A.
Rua Comendador Brandão, 484
4495-375 Póvoa de Varzim
geral@universalmotors.pt
TEL.: 252 299 080

Universal Motors UK, Ltd
Unit E2, Meltham Mills Road
West Yorkshire HD9 4AR
enquiries@universalmotors-group.co.uk
TEL.: +44(0) 1484660222

Universal Motors SL
C/La Habana n.6 nave 4 Pl Camporroso
28806 Alcala de Henares
info@universalmotors-group.es
TEL.: 918 864 213