Technical Data Sheet
Electric Motor Three phase in Cast Iron IE2

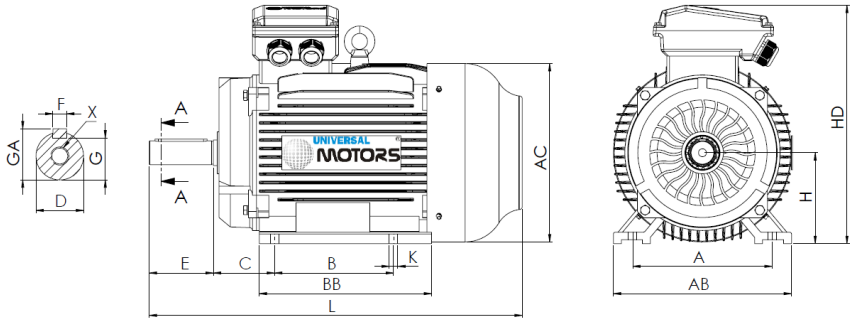

L (standard motor)
1235

L (motor w/brake)
1445

L (motor w/forced ventilation)
1415

L (motor without ventilation)
1060

Feet					Shaft						Carcass				Flange				
H	A	B	C	K	D	E	F	G	GA	X	AB	BB	AC	HD	M	N	P	S	T
315	508	406	216	28	80m6	170	22	71	85	M20x42	635	565	620	845	-	-	-	-	-

Electrical Data

Type	HE30 315S-6	
Poles	6/1000	Poles
Power	75.00	Kw
Voltage	400	V
Frequency	50	Hz
Speed	990	rpm
Nominal current	136.00	A
Power factor	0.85	
Efficiency 100%	93.7	%
Efficiency 75%	94.0	%
Efficiency 50%	93.4	%
Torque	723.4299999999999	N.m
Ta/Tn	2	
Ia/In	6.5	
Tm/Tn	2	

Mechanical Data

Shaft height	315	
Construction form	B3	
Mechanical protection	55	
Heating class	B	
Insulation class	F	
Service	S3-70%	
Ambient temp.	-10ºC-40ºC	
Altitude	1000	
Noise	83	dB(A)
Weight	833	kg
Bearing DE	NU 319	
Bearing NDE	6319 C3	

Extra Data

Applicable brakes

DC brake	K11D	Brake torque	2000/2800	N.m
AC brake	NA	Brake torque	NA	N.m

Applicable forced ventilations

Single-phase forced ventilation	Power	NA	W
Three-phase forced ventilation	Power	450	W

Universal Motors S.A.
Rua Comendador Brandão, 484
4495-375 Póvoa de Varzim
geral@universalmotors.pt
TEL.: 252 299 080

Universal Motors UK, Ltd
Unit E2, Meltham Mills Road
West Yorkshire HD9 4AR
enquiries@universalmotors-group.co.uk
TEL.: +44(0) 1484660222

Universal Motors SL
C/La Habana n.6 nave 4 Pl Camporroso
28806 Alcala de Henares
info@universalmotors-group.es
TEL.: 918 864 213