Technical Data Sheet
Electric Motor Three phase in Cast Iron IE2

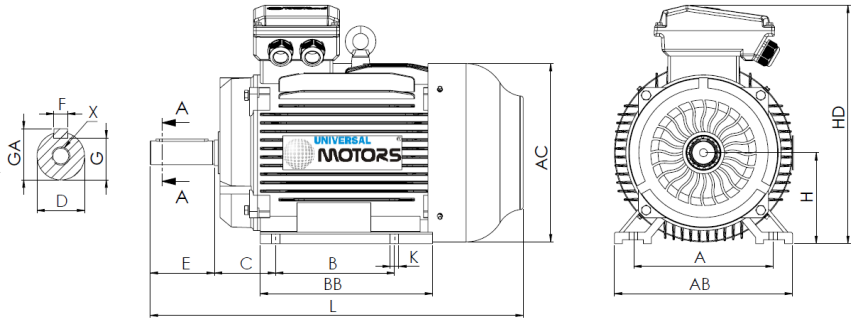

L (standard motor)
1345

L (motor w/brake)
1555

L (motor w/forced ventilation)
1525

L (motor without ventilation)
1170

Feet					Shaft						Carcass				Flange				
H	A	B	C	K	D	E	F	G	GA	X	AB	BB	AC	HD	M	N	P	S	T
315	508	508	216	28	80m6	170	22	71	85	M20x42	635	680	620	845	-	-	-	-	-

Electrical Data

Type	HE30 315L2-8	
Poles	8/750	Poles
Power	110.00	Kw
Voltage	400	V
Frequency	50	Hz
Speed	735	rpm
Nominal current	209.80	A
Power factor	0.82	
Efficiency 100%	92.3	%
Efficiency 75%	-	%
Efficiency 50%	-	%
Torque	1429.15	N.m
Ta/Tn	1.8	
Ia/In	6.4	
Tm/Tn	2	

Mechanical Data

Shaft height	315	
Construction form	B3	
Mechanical protection	55	
Heating class	B	
Insulation class	F	
Service	S3-70%	
Ambient temp.	-10ºC-40ºC	
Altitude	1000	
Noise	82	dB(A)
Weight	1229	kg
Bearing DE	NU 319	
Bearing NDE	6319 C3	

Extra Data

Applicable brakes

DC brake	K12D	Brake torque	4500	N.m
AC brake	NA	Brake torque	NA	N.m

Applicable forced ventilations

Single-phase forced ventilation	Power	NA	W
Three-phase forced ventilation	Power	450	W

Universal Motors S.A.
Rua Comendador Brandão, 484
4495-375 Póvoa de Varzim
geral@universalmotors.pt
TEL.: 252 299 080

Universal Motors UK, Ltd
Unit E2, Meltham Mills Road
West Yorkshire HD9 4AR
enquiries@universalmotors-group.co.uk
TEL.: +44(0) 1484660222

Universal Motors SL
C/La Habana n.6 nave 4 Pl Camporroso
28806 Alcala de Henares
info@universalmotors-group.es
TEL.: 918 864 213