Technical Data Sheet
Electric Motor Three phase in Cast Iron IE1

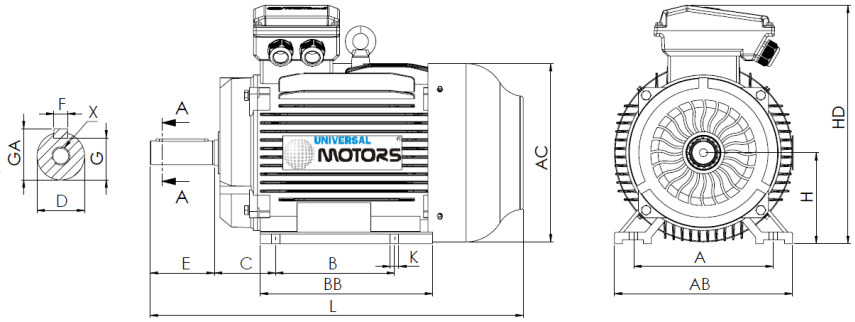


L (standard motor)
1535

L (motor w/brake)
1775

L (motor w/forced ventilation)
1770

L (motor without ventilation)
1400

| Feet | | | | | Shaft | | | | | | Carcass | | | | Flange | | | | |
|---|---|---|---|---|---|---|---|---|---|---|---|---|---|---|---|---|---|---|---|
| H | A | B | C | K | D | E | F | G | GA | X | AB | BB | AC | HD | M | N | P | S | T |
| 355 | 610 | 560 | 254 | 28 | 95m6 | 170 | 25 | 86 | 101 | M20x42 | 730 | 755 | 698 | 1010 | - | - | - | - | - |

## Electrical Data

| | | |
|---|---|---|
| Type | EM30 355M1-6 | |
| Poles | 6/1000 | Poles |
| Power | 160.00 | Kw |
| Voltage | 400 | V |
| Frequency | 50 | Hz |
| Speed | 990 | rpm |
| Nominal current | 278.00 | A |
| Power factor | 0.88 | |
| Efficiency 100% | 94.5 | % |
| Efficiency 75% | - | % |
| Efficiency 50% | - | % |
| Torque | 1543.32 | N.m |
| Ta/Tn | 1.9 | |
| Ia/In | 6.7 | |
| Tm/Tn | 2 | |

## Mechanical Data

| | | |
|---|---|---|
| Shaft height | 355 | |
| Construction form | B3 | |
| Mechanical protection | 55 | |
| Heating class | B | |
| Insulation class | F | |
| Service | S3-70% | |
| Ambient temp. | -10ºC-40ºC | |
| Altitude | 1000 | |
| Noise | 92 | dB(A) |
| Weight | 1550 | kg |
| Bearing DE | NU 322 | |
| Bearing NDE | 6322 C3 | |

## Extra Data

**Applicable brakes**

| | | | | |
|---|---|---|---|---|
| DC brake | K12D | Brake torque | 4500 | N.m |
| AC brake | NA | Brake torque | NA | N.m |

**Applicable forced ventilations**

| | | | |
|---|---|---|---|
| Single-phase forced ventilation | Power | NA | W |
| Three-phase forced ventilation | Power | 700 | W |

Universal Motors S.A.
Rua Comendador Brandão, 484
4495-375 Póvoa de Varzim
geral@universalmotors.pt
TEL.: 252 299 080

Universal Motors UK, Ltd
Unit E2, Meltham Mills Road
West Yorkshire HD9 4AR
enquiries@universalmotors-group.co.uk
TEL.: +44(0) 1484660222

Universal Motors SL
C/La Habana n.6 nave 4 Pl Camporroso
28806 Alcala de Henares
info@universalmotors-group.es
TEL.: 918 864 213