Technical Data Sheet
Electric Motor Three phase in Cast Iron IE3

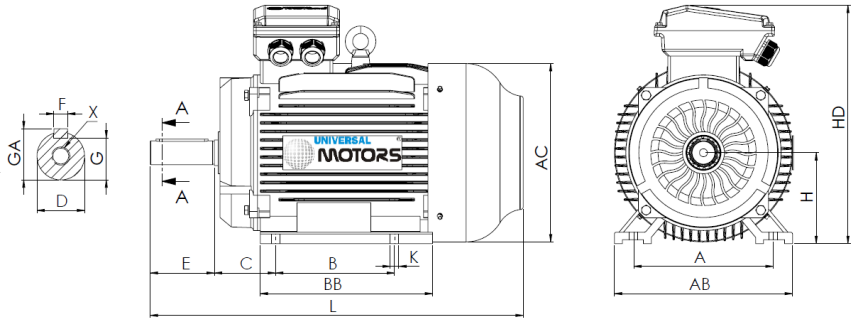

L (standard motor)
1505

L (motor w/brake)
NA

L (motor w/forced ventilation)
1740

L (motor without ventilation)
1370

Feet					Shaft						Carcass				Flange				
H	A	B	C	K	D	E	F	G	GA	X	AB	BB	AC	HD	M	N	P	S	T
355	610	630	254	28	75m6	140	20	67.5	79.5	M20x42	730	755	698	1010	-	-	-	-	-

Electrical Data

Type	PE30/UM3C* 355L-2	
Poles	2/3000	Poles
Power	315.00	Kw
Voltage	400	V
Frequency	50	Hz
Speed	2980	rpm
Nominal current	521.60	A
Power factor	0.91	
Efficiency 100%	95.8	%
Efficiency 75%	95.9	%
Efficiency 50%	94.9	%
Torque	1009.4	N.m
Ta/Tn	1.6	
Ia/In	7.2	
Tm/Tn	2.2	

Mechanical Data

Shaft height	355	
Construction form	B3	
Mechanical protection	55	
Heating class	B	
Insulation class	F	
Service	S1	
Ambient temp.	-10ºC-40ºC	
Altitude	1000	
Noise	100	dB(A)
Weight	1843	kg
Bearing DE	6319 C3	
Bearing NDE	6319 C3	

Extra Data

Applicable brakes

DC brake	NA	Brake torque	NA	N.m
AC brake	NA	Brake torque	NA	N.m

Applicable forced ventilations

Single-phase forced ventilation	Power	NA	W
Three-phase forced ventilation	Power	700	W

Universal Motors S.A.
Rua Comendador Brandão, 484
4495-375 Póvoa de Varzim
geral@universalmotors.pt
TEL.: 252 299 080

Universal Motors UK, Ltd
Unit E2, Meltham Mills Road
West Yorkshire HD9 4AR
enquiries@universalmotors-group.co.uk
TEL.: +44(0) 1484660222

Universal Motors SL
C/La Habana n.6 nave 4 Pl Camporroso
28806 Alcala de Henares
info@universalmotors-group.es
TEL.: 918 864 213