Technical Data Sheet
Electric Motor Three phase in Cast Iron IE3

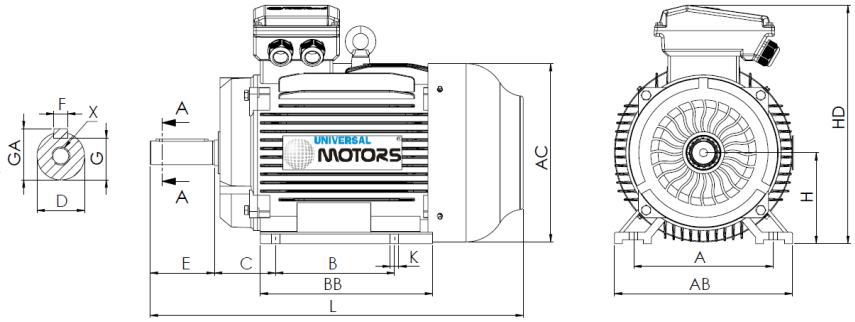

L (standard motor)
355

L (motor w/brake)
465

L (motor w/forced ventilation)
460

L (motor without ventilation)
345

Feet					Shaft						Carcass				Flange				
H	A	B	C	K	D	E	F	G	GA	X	AB	BB	AC	HD	M	N	P	S	T
90	140	100	56	10	24j6	50	8	20	27	M8x19	180	140	177	250	-	-	-	-	-

Electrical Data

Type	PE30/UM3C* 90S-6	
Poles	6/1000	Poles
Power	0.75	Kw
Voltage	400	V
Frequency	50	Hz
Speed	905	rpm
Nominal current	1.93	A
Power factor	0.71	
Efficiency 100%	78.9	%
Efficiency 75%	79.8	%
Efficiency 50%	77.9	%
Torque	7.9	N.m
Ta/Tn	2	
Ia/In	6.0	
Tm/Tn	2.1	

Mechanical Data

Shaft height	90	
Construction form	B3	
Mechanical protection	55	
Heating class	B	
Insulation class	F	
Service	S1	
Ambient temp.	-10ºC-40ºC	
Altitude	1000	
Noise	57	dB(A)
Weight	26	kg
Bearing DE	6205 2Z C3	
Bearing NDE	6205 2Z C3	

Extra Data

Applicable brakes

DC brake	REB-05-10	Brake torque	16	N.m
AC brake	AC4	Brake torque	20	N.m

Applicable forced ventilations

Single-phase forced ventilation	Power	45	W
Three-phase forced ventilation	Power	45	W

Universal Motors S.A.
Rua Comendador Brandão, 484
4495-375 Póvoa de Varzim
geral@universalmotors.pt
TEL.: 252 299 080

Universal Motors UK, Ltd
Unit E2, Meltham Mills Road
West Yorkshire HD9 4AR
enquiries@universalmotors-group.co.uk
TEL.: +44(0) 1484660222

Universal Motors SL
C/La Habana n.6 nave 4 Pl Camporroso
28806 Alcala de Henares
info@universalmotors-group.es
TEL.: 918 864 213