Technical Data Sheet
Electric Motor Three phase in Cast Iron IE4

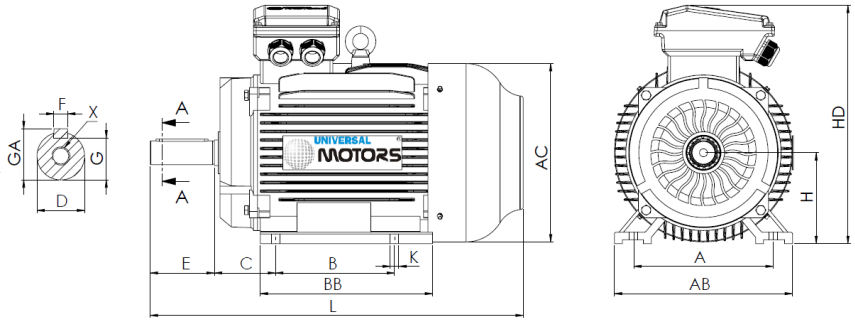

L (standard motor)
745

L (motor w/brake)
855

L (motor w/forced ventilation)
865

L (motor without ventilation)
655

Feet					Shaft						Carcass				Flange				
H	A	B	C	K	D	E	F	G	GA	X	AB	BB	AC	HD	M	N	P	S	T
160	254	254	108	15	42k6	110	12	37	45	M16x36	320	305	315	420	-	-	-	-	-

Electrical Data

Type	UM4C 160L,-6	
Poles	6/1000	Poles
Power	11.00	Kw
Voltage	400	V
Frequency	50	Hz
Speed	980	rpm
Nominal current	22.34	A
Power factor	0.77	
Efficiency 100%	92.3	%
Efficiency 75%	90.9	%
Efficiency 50%	89.6	%
Torque	107.2	N.m
Ta/Tn	2	
Ia/In	8.5	
Tm/Tn	2.1	

Mechanical Data

Shaft height	160	
Construction form	B3	
Mechanical protection	55	
Heating class	B	
Insulation class	F	
Service	S1	
Ambient temp.	-10ºC-40ºC	
Altitude	1000	
Noise	73	dB(A)
Weight	163	kg
Bearing DE	6309 C3	
Bearing NDE	6309 C3	

Extra Data

Applicable brakes

DC brake	K8	Brake torque	200	N.m
AC brake	AC8	Brake torque	200	N.m

Applicable forced ventilations

Single-phase forced ventilation	Power	NA	W
Three-phase forced ventilation	Power	60	W

Universal Motors S.A.
Rua Comendador Brandão, 484
4495-375 Póvoa de Varzim
geral@universalmotors.pt
TEL.: 252 299 080

Universal Motors UK, Ltd
Unit E2, Meltham Mills Road
West Yorkshire HD9 4AR
enquiries@universalmotors-group.co.uk
TEL.: +44(0) 1484660222

Universal Motors SL
C/La Habana n.6 nave 4 PI Camporroso
28806 Alcala de Henares
info@universalmotors-group.es
TEL.: 918 864 213