Technical Data Sheet
Electric Motor Three phase in Cast Iron IE4

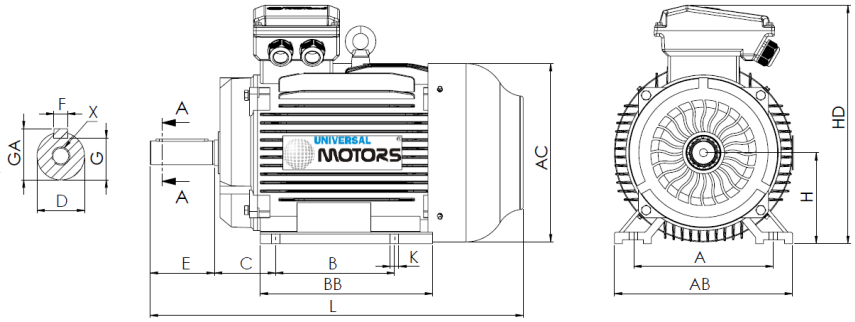

L (standard motor)
810

L (motor w/brake)
965

L (motor w/forced ventilation)
895

L (motor without ventilation)
715

Feet					Shaft						Carcass				Flange				
H	A	B	C	K	D	E	F	G	GA	X	AB	BB	AC	HD	M	N	P	S	T
180	279	279	121	15	48k6	110	14	42.5	51.5	M16x36	355	350	355	455	-	-	-	-	-

Electrical Data

Type	UM4C 180L-8	
Poles	8/750	Poles
Power	11.00	Kw
Voltage	400	V
Frequency	50	Hz
Speed	735	rpm
Nominal current	23.70	A
Power factor	0.74	
Efficiency 100%	90.4	%
Efficiency 75%	88.6	%
Efficiency 50%	87.7	%
Torque	142.925170068027	N.m
Ta/Tn	1.8	
Ia/In	7.9	
Tm/Tn	2	

Mechanical Data

Shaft height	180	
Construction form	B3	
Mechanical protection	55	
Heating class	B	
Insulation class	F	
Service	S1	
Ambient temp.	-10ºC-40ºC	
Altitude	1000	
Noise	70	dB(A)
Weight	216	kg
Bearing DE	6311 C3	
Bearing NDE	6311 C3	

Extra Data

Applicable brakes

DC brake	K8D	Brake torque	400	N.m
AC brake	AC8D	Brake torque	400	N.m

Applicable forced ventilations

Single-phase forced ventilation	Power	NA	W
Three-phase forced ventilation	Power	85	W

Universal Motors S.A.
Rua Comendador Brandão, 484
4495-375 Póvoa de Varzim
geral@universalmotors.pt
TEL.: 252 299 080

Universal Motors UK, Ltd
Unit E2, Meltham Mills Road
West Yorkshire HD9 4AR
enquiries@universalmotors-group.co.uk
TEL.: +44(0) 1484660222

Universal Motors SL
C/La Habana n.6 nave 4 Pl Camporroso
28806 Alcala de Henares
info@universalmotors-group.es
TEL.: 918 864 213