Technical Data Sheet
Electric Motor Three phase in Cast Iron IE4

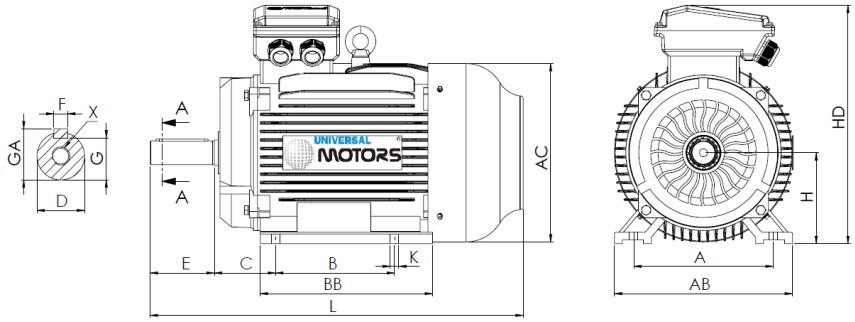

L (standard motor)
930

L (motor w/brake)
1095

L (motor w/forced ventilation)
1060

L (motor without ventilation)
810

Feet					Shaft						Carcass				Flange				
H	A	B	C	K	D	E	F	G	GA	X	AB	BB	AC	HD	M	N	P	S	T
225	356	311	149	19	60m6	140	18	53	64	M20x42	435	445	445	560	-	-	-	-	-

Electrical Data

Type	UM4C 225M-6	
Poles	6/1000	Poles
Power	30.00	Kw
Voltage	400	V
Frequency	50	Hz
Speed	985	rpm
Nominal current	56.06	A
Power factor	0.82	
Efficiency 100%	94.2	%
Efficiency 75%	94.5	%
Efficiency 50%	93.5	%
Torque	290.8	N.m
Ta/Tn	2	
Ia/In	8.3	
Tm/Tn	2.1	

Mechanical Data

Shaft height	225	
Construction form	B3	
Mechanical protection	55	
Heating class	B	
Insulation class	F	
Service	S1	
Ambient temp.	-10ºC-40ºC	
Altitude	1000	
Noise	76	dB(A)
Weight	400	kg
Bearing DE	6313 C3	
Bearing NDE	6313 C3	

Extra Data

Applicable brakes

DC brake	K9D	Brake torque	600	N.m
AC brake	NA	Brake torque	NA	N.m

Applicable forced ventilations

Single-phase forced ventilation	Power	NA	W
Three-phase forced ventilation	Power	170	W

Universal Motors S.A.
Rua Comendador Brandão, 484
4495-375 Póvoa de Varzim
geral@universalmotors.pt
TEL.: 252 299 080

Universal Motors UK, Ltd
Unit E2, Meltham Mills Road
West Yorkshire HD9 4AR
enquiries@universalmotors-group.co.uk
TEL.: +44(0) 1484660222

Universal Motors SL
C/La Habana n.6 nave 4 Pl Camporroso
28806 Alcala de Henares
info@universalmotors-group.es
TEL.: 918 864 213