Technical Data Sheet
Electric Motor Three phase in Cast Iron IE3

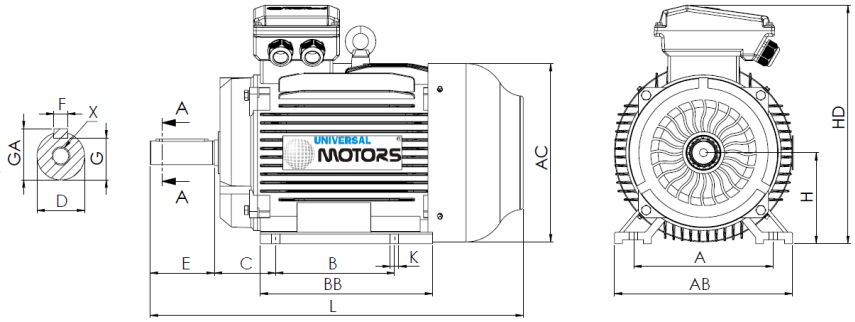

L (standard motor)
1060

L (motor w/brake)
1270

L (motor w/forced ventilation)
1215

L (motor without ventilation)
940

Feet					Shaft						Carcass				Flange				
H	A	B	C	K	D	E	F	G	GA	X	AB	BB	AC	HD	M	N	P	S	T
280	457	419	190	24	75m6	140	20	67.5	79.5	M20x42	550	535	547	680	-	-	-	-	-

Electrical Data

Type	PE30/UM3C* 280M-6	
Poles	6/1000	Poles
Power	55.00	Kw
Voltage	400	V
Frequency	50	Hz
Speed	980	rpm
Nominal current	98.10	A
Power factor	0.86	
Efficiency 100%	94.1	%
Efficiency 75%	94.2	%
Efficiency 50%	93.2	%
Torque	535.9	N.m
Ta/Tn	2	
Ia/In	7.3	
Tm/Tn	2	

Mechanical Data

Shaft height	280	
Construction form	B3	
Mechanical protection	55	
Heating class	B	
Insulation class	F	
Service	S1	
Ambient temp.	-10ºC-40ºC	
Altitude	1000	
Noise	83	dB(A)
Weight	585	kg
Bearing DE	6317 C3	
Bearing NDE	6317 C3	

Extra Data

Applicable brakes

DC brake	K10D	Brake torque	1000/1500	N.m
AC brake	NA	Brake torque	NA	N.m

Applicable forced ventilations

Single-phase forced ventilation	Power	NA	W
Three-phase forced ventilation	Power	270	W

Universal Motors S.A.
Rua Comendador Brandão, 484
4495-375 Póvoa de Varzim
geral@universalmotors.pt
TEL.: 252 299 080

Universal Motors UK, Ltd
Unit E2, Meltham Mills Road
West Yorkshire HD9 4AR
enquiries@universalmotors-group.co.uk
TEL.: +44(0) 1484660222

Universal Motors SL
C/La Habana n.6 nave 4 Pl Camporroso
28806 Alcala de Henares
info@universalmotors-group.es
TEL.: 918 864 213