Technical Data Sheet
Electric Motor Three phase in Cast Iron IE4

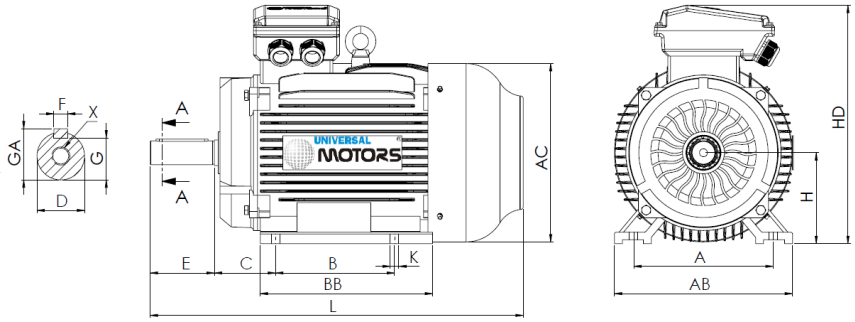

L (standard motor)
1315

L (motor w/brake)
NA

L (motor w/forced ventilation)
1495

L (motor without ventilation)
1140

Feet					Shaft						Carcass				Flange				
H	A	B	C	K	D	E	F	G	GA	X	AB	BB	AC	HD	M	N	P	S	T
315	508	508	216	28	65m6	140	18	58	69	M20x42	635	680	620	845	-	-	-	-	-

Electrical Data

Type	UM4C 315L2-2	
Poles	2/3000	Poles
Power	200.00	Kw
Voltage	400	V
Frequency	50	Hz
Speed	2980	rpm
Nominal current	336.13	A
Power factor	0.89	
Efficiency 100%	96.5	%
Efficiency 75%	96.4	%
Efficiency 50%	95.5	%
Torque	640.939597315436	N.m
Ta/Tn	1.8	
Ia/In	8.5	
Tm/Tn	2.2	

Mechanical Data

Shaft height	315	
Construction form	B3	
Mechanical protection	55	
Heating class	B	
Insulation class	F	
Service	S1	
Ambient temp.	-10ºC-40ºC	
Altitude	1000	
Noise	92	dB(A)
Weight	1134	kg
Bearing DE	6317 C3	
Bearing NDE	6317 C3	

Extra Data

Applicable brakes

DC brake	NA	Brake torque	NA	N.m
AC brake	NA	Brake torque	NA	N.m

Applicable forced ventilations

Single-phase forced ventilation	Power	NA	W
Three-phase forced ventilation	Power	450	W

Universal Motors S.A.
Rua Comendador Brandão, 484
4495-375 Póvoa de Varzim
geral@universalmotors.pt
TEL.: 252 299 080

Universal Motors UK, Ltd
Unit E2, Meltham Mills Road
West Yorkshire HD9 4AR
enquiries@universalmotors-group.co.uk
TEL.: +44(0) 1484660222

Universal Motors SL
C/La Habana n.6 nave 4 PI Camporroso
28806 Alcala de Henares
info@universalmotors-group.es
TEL.: 918 864 213