Technical Data Sheet
Electric Motor Three phase in Aluminum IE3

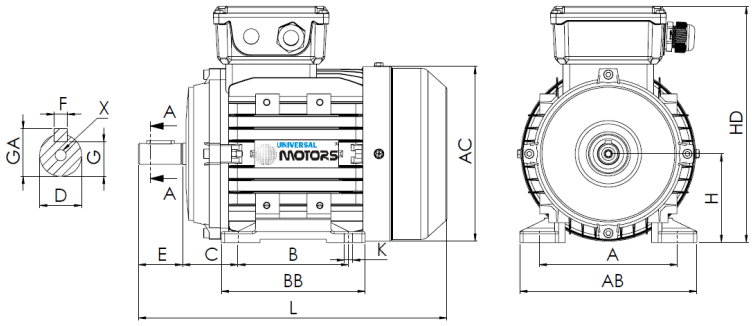

L (standard motor)
384

L (motor w/brake)
460

L (motor w/forced ventilation)
495

L (motor without ventilation)
339

Feet					Shaft						Carcass				Flange				
H	A	B	C	K	D	E	F	G	GA	X	AB	BB	AC	HD	M	N	P	S	T
100	160	140	63	12	28j6	60	8	24	31	M10x22	198	176	205	252	-	-	-	-	-

Electrical Data

Type	PE31/UM3A* 100L-6	
Poles	6/1000	Poles
Power	1.50	Kw
Voltage	400	V
Frequency	50	Hz
Speed	955	rpm
Nominal current	3.60	A
Power factor	0.73	
Efficiency 100%	82.5	%
Efficiency 75%	83.6	%
Efficiency 50%	82.3	%
Torque	15	N.m
Ta/Tn	2.1	
Ia/In	6.0	
Tm/Tn	2.1	

Mechanical Data

Shaft height	100	
Construction form	B3	
Mechanical protection	55	
Heating class	B	
Insulation class	F	
Service	S1	
Ambient temp.	-10ºC-40ºC	
Altitude	1000	
Noise	64	dB(A)
Weight	28	kg
Bearing DE	6206 2Z C3	
Bearing NDE	6206 2Z C3	

Extra Data

Applicable brakes

DC brake	REB-05-12	Brake torque	32	N.m
AC brake	NA	Brake torque	NA	N.m

Applicable forced ventilations

Single-phase forced ventilation	Power	65	W
Three-phase forced ventilation	Power	65	W

Universal Motors S.A.
Rua Comendador Brandão, 484
4495-375 Póvoa de Varzim
geral@universalmotors.pt
TEL.: 252 299 080

Universal Motors UK, Ltd
Unit E2, Meltham Mills Road
West Yorkshire HD9 4AR
enquiries@universalmotors-group.co.uk
TEL.: +44(0) 1484660222

Universal Motors SL
C/La Habana n.6 nave 4 Pl Camporroso
28806 Alcala de Henares
info@universalmotors-group.es
TEL.: 918 864 213