Technical Data Sheet
Electric Motor Three phase in Aluminum IE2

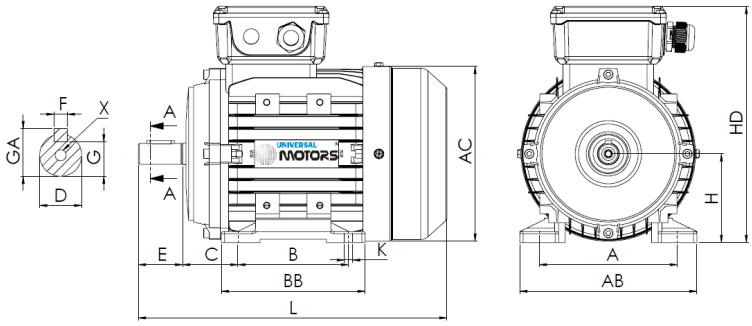

L (standard motor)
503

L (motor w/brake)
590

L (motor w/forced ventilation)
630

L (motor without ventilation)
391

Feet					Shaft						Carcass				Flange				
H	A	B	C	K	D	E	F	G	GA	X	AB	BB	AC	HD	M	N	P	S	T
132	216	178	89	12	38k6	80	10	33	41	M12x28	254	214	265	324	-	-	-	-	-

Electrical Data

Type	HE31/UMHA* 132M3-4	
Poles	4/1500	Poles
Power	11.00	Kw
Voltage	400	V
Frequency	50	Hz
Speed	1450	rpm
Nominal current	20.80	A
Power factor	0.85	
Efficiency 100%	89.8	%
Efficiency 75%	90.0	%
Efficiency 50%	90.0	%
Torque	72.44	N.m
Ta/Tn	3.1	
Ia/In	9.0	
Tm/Tn	3.3	

Mechanical Data

Shaft height	132	
Construction form	B3	
Mechanical protection	55	
Heating class	B	
Insulation class	F	
Service	S3-70%	
Ambient temp.	-10ºC-40ºC	
Altitude	1000	
Noise	75	dB(A)
Weight	67.5	kg
Bearing DE	6308 2Z C3	
Bearing NDE	6308 2Z C3	

Extra Data

Applicable brakes

DC brake	REB-05-16	Brake torque	80	N.m
AC brake	AC7	Brake torque	90	N.m

Applicable forced ventilations

Single-phase forced ventilation	Power	55	W
Three-phase forced ventilation	Power	55	W

Universal Motors S.A.
Rua Comendador Brandão, 484
4495-375 Póvoa de Varzim
geral@universalmotors.pt
TEL.: 252 299 080

Universal Motors UK, Ltd
Unit E2, Meltham Mills Road
West Yorkshire HD9 4AR
enquiries@universalmotors-group.co.uk
TEL.: +44(0) 1484660222

Universal Motors SL
C/La Habana n.6 nave 4 Pl Camporroso
28806 Alcala de Henares
info@universalmotors-group.es
TEL.: 918 864 213