Technical Data Sheet
Electric Motor Three phase in Aluminum IE2

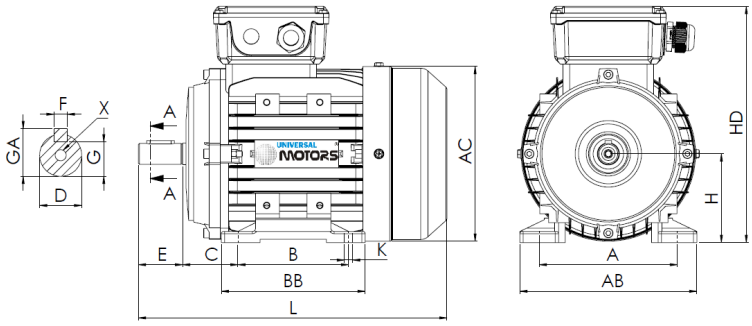

L (standard motor)
278

L (motor w/brake)
345

L (motor w/forced ventilation)
390

L (motor without ventilation)
247

Feet					Shaft						Carcass				Flange				
H	A	B	C	K	D	E	F	G	GA	X	AB	BB	AC	HD	M	N	P	S	T
80	125	100	50	10	19j6	40	6	15.5	21.5	M6x16	160	130	165	217	-	-	-	-	-

Electrical Data

Type	HE31/UMHA* 80M1-4	
Poles	4/1500	Poles
Power	0.55	Kw
Voltage	400	V
Frequency	50	Hz
Speed	1420	rpm
Nominal current	1.38	A
Power factor	0.75	
Efficiency 100%	77.1	%
Efficiency 75%	78.9	%
Efficiency 50%	79.8	%
Torque	3.7	N.m
Ta/Tn	2.4	
Ia/In	5.1	
Tm/Tn	2.4	

Mechanical Data

Shaft height	80	
Construction form	B3	
Mechanical protection	55	
Heating class	B	
Insulation class	F	
Service	S1	
Ambient temp.	-10ºC-40ºC	
Altitude	1000	
Noise	66	dB(A)
Weight	9.5	kg
Bearing DE	6204 2Z C3	
Bearing NDE	6204 2Z C3	

Extra Data

Applicable brakes

DC brake	REB-05-08	Brake torque	8	N.m
AC brake	AC3	Brake torque	15	N.m

Applicable forced ventilations

Single-phase forced ventilation	Power	45	W
Three-phase forced ventilation	Power	45	W

Universal Motors S.A.
Rua Comendador Brandão, 484
4495-375 Póvoa de Varzim
geral@universalmotors.pt
TEL.: 252 299 080

Universal Motors UK, Ltd
Unit E2, Meltham Mills Road
West Yorkshire HD9 4AR
enquiries@universalmotors-group.co.uk
TEL.: +44(0) 1484660222

Universal Motors SL
C/La Habana n.6 nave 4 Pl Camporroso
28806 Alcala de Henares
info@universalmotors-group.es
TEL.: 918 864 213