Technical Data Sheet
Electric Motor Three phase in Aluminum IE3

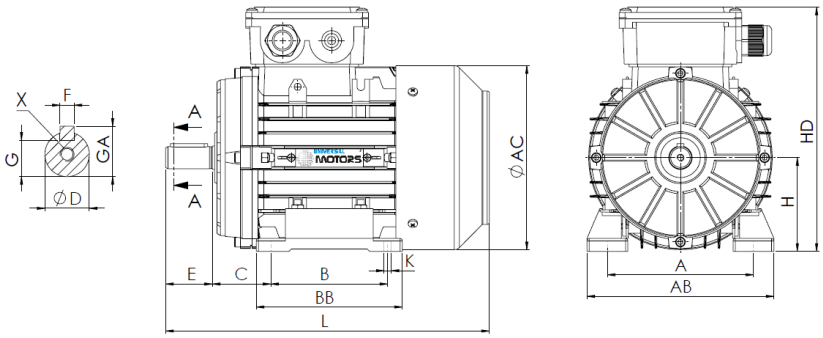

L (standard motor)
400

L (motor w/brake)
470

L (motor w/forced ventilation)
510

L (motor without ventilation)
342

Feet					Shaft						Carcass				Flange				
H	A	B	C	K	D	E	F	G	GA	X	AB	BB	AC	HD	M	N	P	S	T
112	190	140	70	12	28j6	60	8	24	31	M10x22	227	183	220	279	-	-	-	-	-

Electrical Data

Type	UM3A 112M1-4	
Poles	4/1500	Poles
Power	4.00	Kw
Voltage	400	V
Frequency	50	Hz
Speed	1450	rpm
Nominal current	7.95	A
Power factor	0.82	
Efficiency 100%	88.6	%
Efficiency 75%	88.8	%
Efficiency 50%	88.2	%
Torque	26.3	N.m
Ta/Tn	3.1	
Ia/In	8.6	
Tm/Tn	3.7	

Mechanical Data

Shaft height	112	
Construction form	B3	
Mechanical protection	55	
Heating class	B	
Insulation class	F	
Service	S1	
Ambient temp.	-10ºC-40ºC	
Altitude	1000	
Noise	65	dB(A)
Weight	33.9	kg
Bearing DE	6306 ZZ C3	
Bearing NDE	6206 ZZ C3	

Extra Data

Applicable brakes

DC brake	REB-05-14	Brake torque	60	N.m
AC brake	AC6	Brake torque	60	N.m

Applicable forced ventilations

Single-phase forced ventilation	Power	80	W
Three-phase forced ventilation	Power	80	W

Universal Motors S.A.
Rua Comendador Brandão, 484
4495-375 Póvoa de Varzim
geral@universalmotors.pt
TEL.: 252 299 080

Universal Motors UK, Ltd
Unit E2, Meltham Mills Road
West Yorkshire HD9 4AR
enquiries@universalmotors-group.co.uk
TEL.: +44(0) 1484660222

Universal Motors SL
C/La Habana n.6 nave 4 Pl Camporroso
28806 Alcala de Henares
info@universalmotors-group.es
TEL.: 918 864 213