Technical Data Sheet
Electric Motor Three phase in Aluminum -

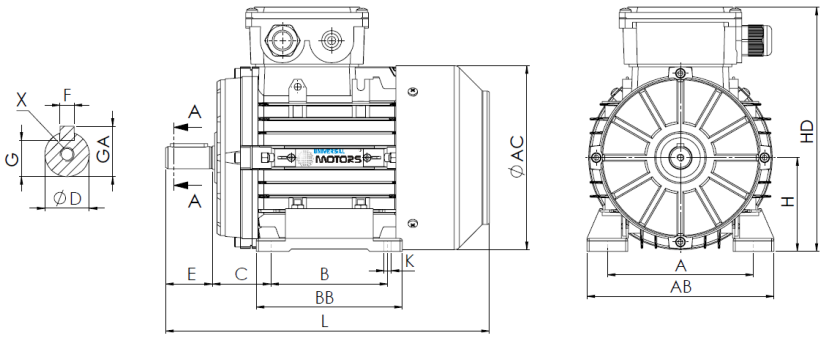

L (standard motor)
245

L (motor w/brake)
300

L (motor w/forced ventilation)
350

L (motor without ventilation)
212

Feet					Shaft						Carcass				Flange				
H	A	B	C	K	D	E	F	G	GA	X	AB	BB	AC	HD	M	N	P	S	T
71	112	90	45	7	14j6	30	5	11	16	M5x12	142	110	138	198	-	-	-	-	-

Electrical Data

Type	UMDA 71M2-2/4	
Poles	2/4	Poles
Power	0,45 / 0,3	Kw
Voltage	400	V
Frequency	50	Hz
Speed	2790 / 1380	rpm
Nominal current	1,29 / 1,02	A
Power factor	0,8 / 0,73	
Efficiency 100%	63 / 58	%
Efficiency 75%	-	%
Efficiency 50%	-	%
Torque	1,54 / 2,08	N.m
Ta/Tn	2,0 / 2,0	
Ia/In	4,0 / 4,0	
Tm/Tn	2,0 / 2,0	

Mechanical Data

Shaft height	71	
Construction form	B3	
Mechanical protection	55	
Heating class	B	
Insulation class	F	
Service	S1	
Ambient temp.	-10ºC-40ºC	
Altitude	1000	
Noise	-	dB(A)
Weight	6.2	kg
Bearing DE	6202 2Z C3	
Bearing NDE	6202 2Z C3	

Extra Data

Applicable brakes

DC brake	REB-05-06	Brake torque	4	N.m
AC brake	AC2	Brake torque	10	N.m

Applicable forced ventilations

Single-phase forced ventilation	Power	35	W
Three-phase forced ventilation	Power	35	W

Universal Motors S.A.
Rua Comendador Brandão, 484
4495-375 Póvoa de Varzim
geral@universalmotors.pt
TEL.: 252 299 080

Universal Motors UK, Ltd
Unit E2, Meltham Mills Road
West Yorkshire HD9 4AR
enquiries@universalmotors-group.co.uk
TEL.: +44(0) 1484660222

Universal Motors SL
C/La Habana n.6 nave 4 Pl Camporroso
28806 Alcala de Henares
info@universalmotors-group.es
TEL.: 918 864 213