Technical Data Sheet
Electric Motor Three phase in Aluminum IE2

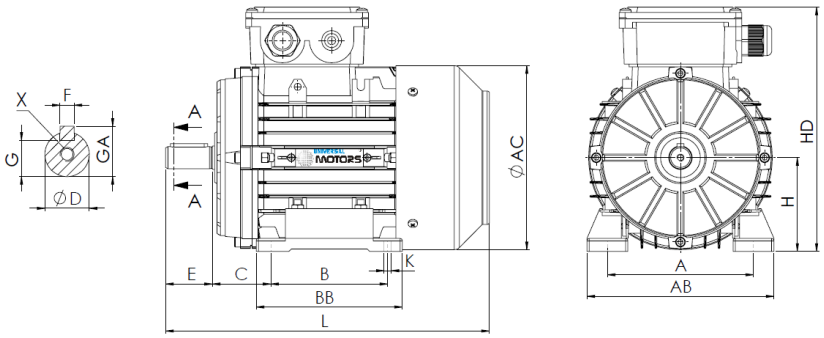

L (standard motor)
285

L (motor w/brake)
345

L (motor w/forced ventilation)
392

L (motor without ventilation)
242

Feet					Shaft						Carcass				Flange				
H	A	B	C	K	D	E	F	G	GA	X	AB	BB	AC	HD	M	N	P	S	T
80	125	100	50	10	19j6	40	6	15.5	21.5	M6x16	162	127	158	228	-	-	-	-	-

Electrical Data

Type	UM2A 80M2-2	
Poles	2/3000	Poles
Power	1.10	Kw
Voltage	400	V
Frequency	50	Hz
Speed	2860	rpm
Nominal current	2.43	A
Power factor	0.82	
Efficiency 100%	79.6	%
Efficiency 75%	79.9	%
Efficiency 50%	77.5	%
Torque	3.67	N.m
Ta/Tn	2.6	
Ia/In	7.0	
Tm/Tn	2.6	

Mechanical Data

Shaft height	80	
Construction form	B3	
Mechanical protection	55	
Heating class	B	
Insulation class	F	
Service	S3-70%	
Ambient temp.	-10ºC-40ºC	
Altitude	1000	
Noise	67	dB(A)
Weight	9.800000000000001kg	
Bearing DE	6204 2Z C3	
Bearing NDE	6204 2Z C3	

Extra Data

Applicable brakes

DC brake	REB-05-08	Brake torque	8	N.m
AC brake	AC3	Brake torque	16	N.m

Applicable forced ventilations

Single-phase forced ventilation	Power	45	W
Three-phase forced ventilation	Power	45	W

Universal Motors S.A.
Rua Comendador Brandão, 484
4495-375 Póvoa de Varzim
geral@universalmotors.pt
TEL.: 252 299 080

Universal Motors UK, Ltd
Unit E2, Meltham Mills Road
West Yorkshire HD9 4AR
enquiries@universalmotors-group.co.uk
TEL.: +44(0) 1484660222

Universal Motors SL
C/La Habana n.6 nave 4 Pl Camporroso
28806 Alcala de Henares
info@universalmotors-group.es
TEL.: 918 864 213