Technical Data Sheet
Electric Motor Three phase in Aluminum IE3

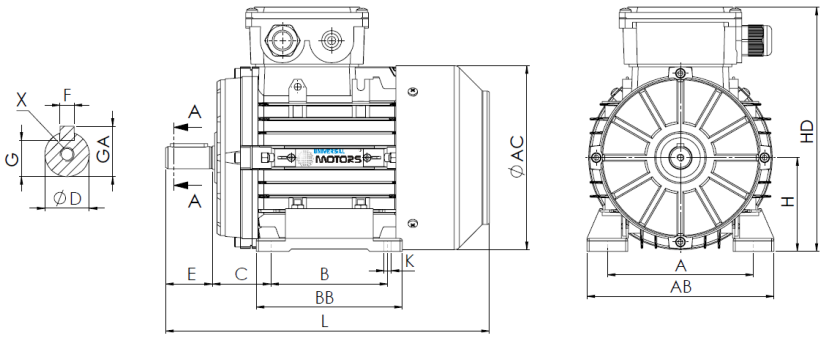

L (standard motor)
430

L (motor w/brake)
NA

L (motor w/forced ventilation)
510

L (motor without ventilation)
372

Feet					Shaft						Carcass				Flange				
H	A	B	C	K	D	E	F	G	GA	X	AB	BB	AC	HD	M	N	P	S	T
112	190	140	70	12	28j6	60	8	24	31	M10x22	227	183	220	279	-	-	-	-	-

Electrical Data

Type	UM3A 112M3-2	
Poles	2/3000	Poles
Power	7.50	Kw
Voltage	400	V
Frequency	50	Hz
Speed	2920	rpm
Nominal current	13.06	A
Power factor	0.92	
Efficiency 100%	90.1	%
Efficiency 75%	91.0	%
Efficiency 50%	90.0	%
Torque	24.5	N.m
Ta/Tn	3.5	
Ia/In	11.4	
Tm/Tn	3.8	

Mechanical Data

Shaft height	112	
Construction form	B3	
Mechanical protection	55	
Heating class	B	
Insulation class	F	
Service	S1	
Ambient temp.	-10ºC-40ºC	
Altitude	1000	
Noise	80	dB(A)
Weight	40	kg
Bearing DE	6306 ZZ C3	
Bearing NDE	6206 ZZ C3	

Extra Data

Applicable brakes

DC brake	NA	Brake torque	NA	N.m
AC brake	NA	Brake torque	NA	N.m

Applicable forced ventilations

Single-phase forced ventilation	Power	80	W
Three-phase forced ventilation	Power	80	W

Universal Motors S.A.
Rua Comendador Brandão, 484
4495-375 Póvoa de Varzim
geral@universalmotors.pt
TEL.: 252 299 080

Universal Motors UK, Ltd
Unit E2, Meltham Mills Road
West Yorkshire HD9 4AR
enquiries@universalmotors-group.co.uk
TEL.: +44(0) 1484660222

Universal Motors SL
C/La Habana n.6 nave 4 Pl Camporroso
28806 Alcala de Henares
info@universalmotors-group.es
TEL.: 918 864 213