Technical Data Sheet
Electric Motor Three phase in Cast Iron IE4

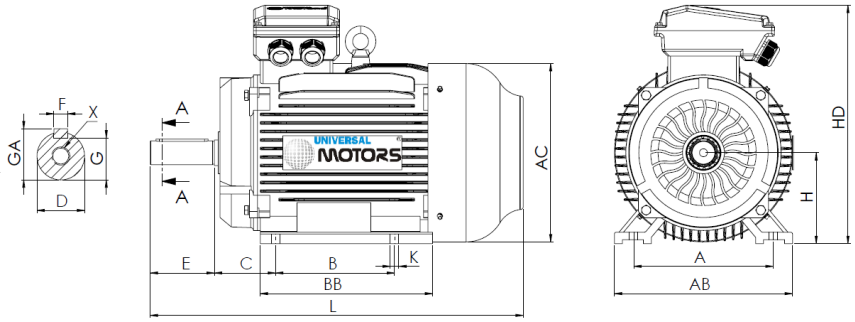

L (standard motor)
795

L (motor w/brake)
NA

L (motor w/forced ventilation)
950

L (motor without ventilation)
700

Feet					Shaft						Carcass				Flange				
H	A	B	C	K	D	E	F	G	GA	X	AB	BB	AC	HD	M	N	P	S	T
200	318	305	133	19	55m6	110	16	49	59	M20x42	385	370	397	505	-	-	-	-	-

Electrical Data

Type	UM4C 200L2-2	
Poles	2/3000	Poles
Power	37.00	Kw
Voltage	400	V
Frequency	50	Hz
Speed	2970	rpm
Nominal current	63.30	A
Power factor	0.89	
Efficiency 100%	94.8	%
Efficiency 75%	93.9	%
Efficiency 50%	92.6	%
Torque	118.973063973064	N.m
Ta/Tn	2	
Ia/In	9.0	
Tm/Tn	2.3	

Mechanical Data

Shaft height	200	
Construction form	B3	
Mechanical protection	55	
Heating class	B	
Insulation class	F	
Service	S1	
Ambient temp.	-10ºC-40ºC	
Altitude	1000	
Noise	84	dB(A)
Weight	283	kg
Bearing DE	6312 C3	
Bearing NDE	6312 C3	

Extra Data

Applicable brakes

DC brake	NA	Brake torque	NA	N.m
AC brake	NA	Brake torque	NA	N.m

Applicable forced ventilations

Single-phase forced ventilation	Power	NA	W
Three-phase forced ventilation	Power	110	W

Universal Motors S.A.
Rua Comendador Brandão, 484
4495-375 Póvoa de Varzim
geral@universalmotors.pt
TEL.: 252 299 080

Universal Motors UK, Ltd
Unit E2, Meltham Mills Road
West Yorkshire HD9 4AR
enquiries@universalmotors-group.co.uk
TEL.: +44(0) 1484660222

Universal Motors SL
C/La Habana n.6 nave 4 Pl Camporroso
28806 Alcala de Henares
info@universalmotors-group.es
TEL.: 918 864 213