Technical Data Sheet
Electric Motor Three phase in Aluminum IE2

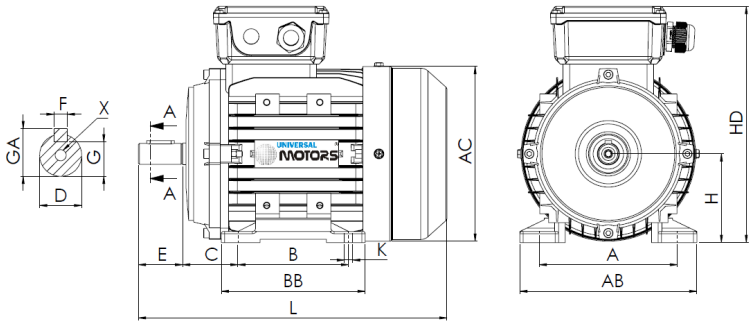

L (standard motor)
322

L (motor w/brake)
395

L (motor w/forced ventilation)
435

L (motor without ventilation)
289

Feet					Shaft						Carcass				Flange				
H	A	B	C	K	D	E	F	G	GA	X	AB	BB	AC	HD	M	N	P	S	T
90	140	125	56	10	24j6	50	8	20	27	M8x19	175	155	182	235	-	-	-	-	-

Electrical Data

Type	HE31/UMHA* 90L1-2	
Poles	2/3000	Poles
Power	2.20	Kw
Voltage	400	V
Frequency	50	Hz
Speed	2845	rpm
Nominal current	4.50	A
Power factor	0.85	
Efficiency 100%	83.2	%
Efficiency 75%	83.7	%
Efficiency 50%	83.2	%
Torque	7.38	N.m
Ta/Tn	2.3	
Ia/In	7.8	
Tm/Tn	2.3	

Mechanical Data

Shaft height	90	
Construction form	B3	
Mechanical protection	55	
Heating class	B	
Insulation class	F	
Service	S3-70%	
Ambient temp.	-10ºC-40ºC	
Altitude	1000	
Noise	78	dB(A)
Weight	16	kg
Bearing DE	6205 2Z C3	
Bearing NDE	6204 2Z C3	

Extra Data

Applicable brakes

DC brake	REB-05-10	Brake torque	16	N.m
AC brake	AC4	Brake torque	20	N.m

Applicable forced ventilations

Single-phase forced ventilation	Power	45	W
Three-phase forced ventilation	Power	45	W

Universal Motors S.A.
Rua Comendador Brandão, 484
4495-375 Póvoa de Varzim
geral@universalmotors.pt
TEL.: 252 299 080

Universal Motors UK, Ltd
Unit E2, Meltham Mills Road
West Yorkshire HD9 4AR
enquiries@universalmotors-group.co.uk
TEL.: +44(0) 1484660222

Universal Motors SL
C/La Habana n.6 nave 4 Pl Camporroso
28806 Alcala de Henares
info@universalmotors-group.es
TEL.: 918 864 213