Technical Data Sheet
Electric Motor Three phase in Cast Iron IE3

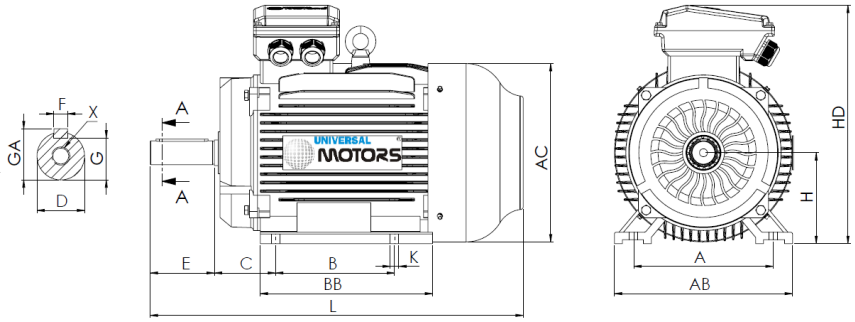

L (standard motor)
1040

L (motor w/brake)
NA

L (motor w/forced ventilation)
1195

L (motor without ventilation)
920

Feet					Shaft						Carcass				Flange				
H	A	B	C	K	D	E	F	G	GA	X	AB	BB	AC	HD	M	N	P	S	T
280	457	368	190	14	75m6	140	20	67.5	79.5	M20x42	550	485	547	680	-	-	-	-	-

Electrical Data

Type	PE30/UM3C* 280S-4	
Poles	4/1500	Poles
Power	75.00	Kw
Voltage	400	V
Frequency	50	Hz
Speed	1485	rpm
Nominal current	129.50	A
Power factor	0.88	
Efficiency 100%	95.0	%
Efficiency 75%	95.1	%
Efficiency 50%	94.2	%
Torque	482.3	N.m
Ta/Tn	2	
Ia/In	6.9	
Tm/Tn	2.3	

Mechanical Data

Shaft height	280	
Construction form	B3	
Mechanical protection	55	
Heating class	B	
Insulation class	F	
Service	S3-70%	
Ambient temp.	-10ºC-40ºC	
Altitude	1000	
Noise	80	dB(A)
Weight	600	kg
Bearing DE	6317 C3	
Bearing NDE	6317 C3	

Extra Data

Applicable brakes

DC brake	NA	Brake torque	NA	N.m
AC brake	NA	Brake torque	NA	N.m

Applicable forced ventilations

Single-phase forced ventilation	Power	NA	W
Three-phase forced ventilation	Power	270	W

Universal Motors S.A.
Rua Comendador Brandão, 484
4495-375 Póvoa de Varzim
geral@universalmotors.pt
TEL.: 252 299 080

Universal Motors UK, Ltd
Unit E2, Meltham Mills Road
West Yorkshire HD9 4AR
enquiries@universalmotors-group.co.uk
TEL.: +44(0) 1484660222

Universal Motors SL
C/La Habana n.6 nave 4 PI Camporroso
28806 Alcala de Henares
info@universalmotors-group.es
TEL.: 918 864 213