Technical Data Sheet
Electric Motor Three phase in Aluminum IE2

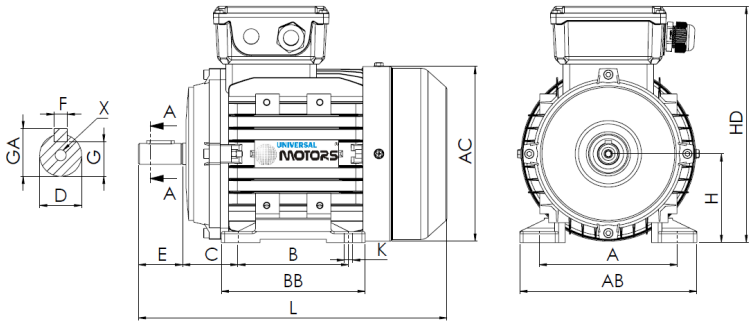

L (standard motor)
375

L (motor w/brake)
450

L (motor w/forced ventilation)
490

L (motor without ventilation)
329

Feet					Shaft						Carcass				Flange				
H	A	B	C	K	D	E	F	G	GA	X	AB	BB	AC	HD	M	N	P	S	T
100	160	140	63	12	28j6	60	8	24	31	M10x22	198	176	205	252	-	-	-	-	-

Electrical Data

Type	HE31/UMHA* 100L1-6	
Poles	6/1000	Poles
Power	1.50	Kw
Voltage	400	V
Frequency	50	Hz
Speed	955	rpm
Nominal current	3.67	A
Power factor	0.74	
Efficiency 100%	79.8	%
Efficiency 75%	80.0	%
Efficiency 50%	79.8	%
Torque	15	N.m
Ta/Tn	2.1	
Ia/In	6.0	
Tm/Tn	2.1	

Mechanical Data

Shaft height	100	
Construction form	B3	
Mechanical protection	55	
Heating class	B	
Insulation class	F	
Service	S3-70%	
Ambient temp.	-10ºC-40ºC	
Altitude	1000	
Noise	15	dB(A)
Weight	27	kg
Bearing DE	6206 2Z C3	
Bearing NDE	6206 2Z C3	

Extra Data

Applicable brakes

DC brake	NA	Brake torque	NA	N.m
AC brake	NA	Brake torque	NA	N.m

Applicable forced ventilations

Single-phase forced ventilation	Power	65	W
Three-phase forced ventilation	Power	65	W

Universal Motors S.A.
Rua Comendador Brandão, 484
4495-375 Póvoa de Varzim
geral@universalmotors.pt
TEL.: 252 299 080

Universal Motors UK, Ltd
Unit E2, Meltham Mills Road
West Yorkshire HD9 4AR
enquiries@universalmotors-group.co.uk
TEL.: +44(0) 1484660222

Universal Motors SL
C/La Habana n.6 nave 4 Pl Camporroso
28806 Alcala de Henares
info@universalmotors-group.es
TEL.: 918 864 213