Technical Data Sheet
Electric Motor 1 phase in Aluminum IE1

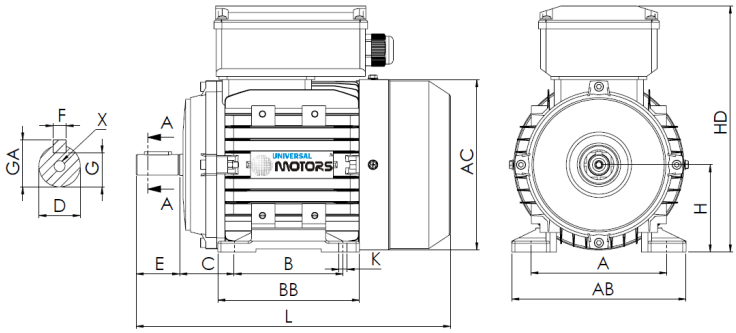

L (standard motor)
196

L (motor w/brake)
NA

L (motor w/forced ventilation)
NA

L (motor without ventilation)
166

Feet					Shaft						Carcass				Flange				
H	A	B	C	K	D	E	F	G	GA	X	AB	BB	AC	HD	M	N	P	S	T
56	90	71	36	5.8	9j6	20	3	7.2	10.2	M3x9	110	89	110	144	-	-	-	-	-

Electrical Data

Type	BF31C 56M1-4	
Poles	4/1500	Poles
Power	0.09	Kw
Voltage	230	V
Frequency	50	Hz
Speed	1370	rpm
Nominal current	0.81	A
Power factor	0.92	
Efficiency 100%	50.0	%
Efficiency 75%	-	%
Efficiency 50%	-	%
Torque	0.63	N.m
Ta/Tn	0.6	
Ia/In	3.8	
Tm/Tn	1.65	

Mechanical Data

Shaft height	56	
Construction form	B3	
Mechanical protection	55	
Heating class	B	
Insulation class	F	
Service	S1	
Ambient temp.	-10ºC-40ºC	
Altitude	1000	
Noise	-	dB(A)
Weight	3.6	kg
Bearing DE	6201 2Z C3	
Bearing NDE	6201 2Z C3	

Extra Data

Applicable brakes

DC brake	NA	Brake torque	NA	N.m
AC brake	NA	Brake torque	NA	N.m

Applicable forced ventilations

Single-phase forced ventilation	Power	NA	W
Three-phase forced ventilation	Power	NA	W

Universal Motors S.A.
Rua Comendador Brandão, 484
4495-375 Póvoa de Varzim
geral@universalmotors.pt
TEL.: 252 299 080

Universal Motors UK, Ltd
Unit E2, Meltham Mills Road
West Yorkshire HD9 4AR
enquiries@universalmotors-group.co.uk
TEL.: +44(0) 1484660222

Universal Motors SL
C/La Habana n.6 nave 4 Pl Camporroso
28806 Alcala de Henares
info@universalmotors-group.es
TEL.: 918 864 213