Technical Data Sheet
Electric Motor 1 phase in Aluminum IE1

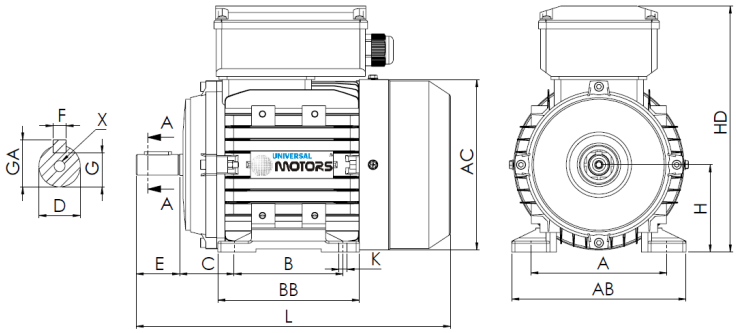

L (standard motor)
220

L (motor w/brake)
316

L (motor w/forced ventilation)
320

L (motor without ventilation)
186

Feet					Shaft						Carcass				Flange				
H	A	B	C	K	D	E	F	G	GA	X	AB	BB	AC	HD	M	N	P	S	T
63	100	80	40	7	11j6	23	4	8.5	12.5	M4x10	120	103	121	181	-	-	-	-	-

Electrical Data

Type	BF31C 63M2-2	
Poles	2/3000	Poles
Power	0.25	Kw
Voltage	230	V
Frequency	50	Hz
Speed	2780	rpm
Nominal current	1.74	A
Power factor	0.93	
Efficiency 100%	66.0	%
Efficiency 75%	-	%
Efficiency 50%	-	%
Torque	0.86	N.m
Ta/Tn	0.55	
Ia/In	3.5	
Tm/Tn	1.8	

Mechanical Data

Shaft height	63	
Construction form	B3	
Mechanical protection	55	
Heating class	B	
Insulation class	F	
Service	S3-70%	
Ambient temp.	-10ºC-40ºC	
Altitude	1000	
Noise	-	dB(A)
Weight	4.5	kg
Bearing DE	6201 2Z C3	
Bearing NDE	6201 2Z C3	

Extra Data

Applicable brakes

DC brake	REB-05-06	Brake torque	4	N.m
AC brake	NA	Brake torque	NA	N.m

Applicable forced ventilations

Single-phase forced ventilation	Power	25	W
Three-phase forced ventilation	Power	NA	W

Universal Motors S.A.
Rua Comendador Brandão, 484
4495-375 Póvoa de Varzim
geral@universalmotors.pt
TEL.: 252 299 080

Universal Motors UK, Ltd
Unit E2, Meltham Mills Road
West Yorkshire HD9 4AR
enquiries@universalmotors-group.co.uk
TEL.: +44(0) 1484660222

Universal Motors SL
C/La Habana n.6 nave 4 Pl Camporroso
28806 Alcala de Henares
info@universalmotors-group.es
TEL.: 918 864 213