Technical Data Sheet
Electric Motor Three phase in Aluminum IE2

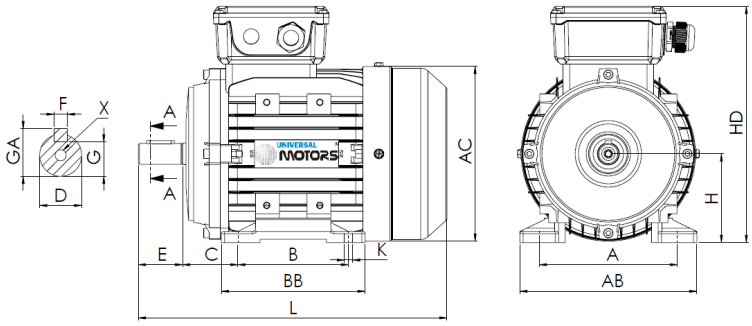

L (standard motor)
390

L (motor w/brake)
490

L (motor w/forced ventilation)
505

L (motor without ventilation)
340

Feet					Shaft						Carcass				Flange				
H	A	B	C	K	D	E	F	G	GA	X	AB	BB	AC	HD	M	N	P	S	T
112	190	140	70	12	28j6	60	8	24	31	M10x22	220	180	230	286	-	-	-	-	-

Electrical Data

Type	HE31/UMHA* 112M2-6	
Poles	6/1000	Poles
Power	3.00	Kw
Voltage	400	V
Frequency	50	Hz
Speed	950	rpm
Nominal current	7.05	A
Power factor	0.74	
Efficiency 100%	83.3	%
Efficiency 75%	84.5	%
Efficiency 50%	83.1	%
Torque	30.16	N.m
Ta/Tn	2.6	
Ia/In	6.0	
Tm/Tn	2.8	

Mechanical Data

Shaft height	112	
Construction form	B3	
Mechanical protection	55	
Heating class	B	
Insulation class	F	
Service	S3-70%	
Ambient temp.	-10ºC-40ºC	
Altitude	1000	
Noise	30.16	dB(A)
Weight	70	kg
Bearing DE	6306 2Z C3	
Bearing NDE	6306 2Z C3	

Extra Data

Applicable brakes

DC brake	NA	Brake torque	NA	N.m
AC brake	NA	Brake torque	NA	N.m

Applicable forced ventilations

Single-phase forced ventilation	Power	80	W
Three-phase forced ventilation	Power	80	W

Universal Motors S.A.
Rua Comendador Brandão, 484
4495-375 Póvoa de Varzim
geral@universalmotors.pt
TEL.: 252 299 080

Universal Motors UK, Ltd
Unit E2, Meltham Mills Road
West Yorkshire HD9 4AR
enquiries@universalmotors-group.co.uk
TEL.: +44(0) 1484660222

Universal Motors SL
C/La Habana n.6 nave 4 Pl Camporroso
28806 Alcala de Henares
info@universalmotors-group.es
TEL.: 918 864 213