Technical Data Sheet
Electric Motor 1 phase in Aluminum IE1

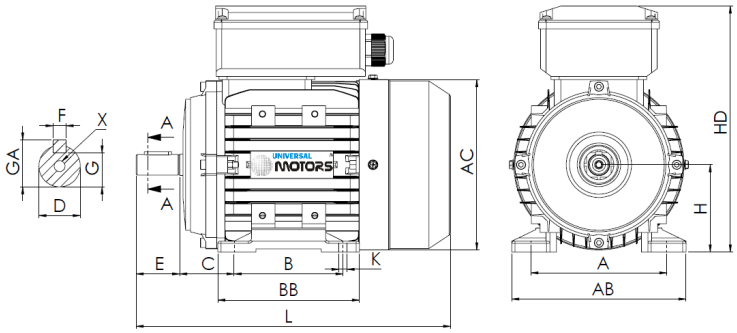

L (standard motor)
312

L (motor w/brake)
371

L (motor w/forced ventilation)
417

L (motor without ventilation)
266

Feet					Shaft						Carcass				Flange				
H	A	B	C	K	D	E	F	G	GA	X	AB	BB	AC	HD	M	N	P	S	T
90	140	100	56	10	24j6	50	8	20	27	M8x19	175	130	175	243	-	-	-	-	-

Electrical Data

Type	BF31C 90S-2	
Poles	2/3000	Poles
Power	1.50	Kw
Voltage	230	V
Frequency	50	Hz
Speed	2820	rpm
Nominal current	8.65	A
Power factor	0.98	
Efficiency 100%	77.0	%
Efficiency 75%	-	%
Efficiency 50%	-	%
Torque	5.08	N.m
Ta/Tn	0.3	
Ia/In	4.0	
Tm/Tn	1.72	

Mechanical Data

Shaft height	90	
Construction form	B3	
Mechanical protection	55	
Heating class	B	
Insulation class	F	
Service	S3-70%	
Ambient temp.	-10ºC-40ºC	
Altitude	1000	
Noise	-	dB(A)
Weight	13.7	kg
Bearing DE	6205 2Z C3	
Bearing NDE	6205 2Z C3	

Extra Data

Applicable brakes

DC brake	REB-05-10	Brake torque	16	N.m
AC brake	NA	Brake torque	NA	N.m

Applicable forced ventilations

Single-phase forced ventilation	Power	45	W
Three-phase forced ventilation	Power	NA	W

Universal Motors S.A.
Rua Comendador Brandão, 484
4495-375 Póvoa de Varzim
geral@universalmotors.pt
TEL.: 252 299 080

Universal Motors UK, Ltd
Unit E2, Meltham Mills Road
West Yorkshire HD9 4AR
enquiries@universalmotors-group.co.uk
TEL.: +44(0) 1484660222

Universal Motors SL
C/La Habana n.6 nave 4 Pl Camporroso
28806 Alcala de Henares
info@universalmotors-group.es
TEL.: 918 864 213