Technical Data Sheet
Gearbox
HELLICAL BEVEL

MODEL	X22S	
Ø OUTPUT SHAFT	20	mm
APPROXIMATE RATIO	24	
EXACT RATIO	24.18	
OUTPUT SPEED	61	RPM
EXACT OUTPUT SPEED	60	RPM
INPUT POWER	0.37	KW
INPUT ROTATION	1400	RPM
INPUT PAM	71B14	
OUTPUT TORQUE	58.58	N.m
NOMINAL TORQUE	50.00	N.m
NOMINAL POWER	0.32	KW
SERVICE FACTOR	0.86	
DYNAMIC EFFICIENCY	0.96	

Oil Quantity (L)

B3/H1	B6/H4	B7/H3	B8/H2	V5/H5	V6/H6
0.25	0.25	0.25	0.25	0.43	0.31

Radial and Axial Loads

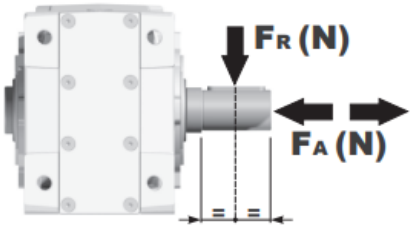

n_2 [min-1]	FA [N]	FR [N]
400	360	1800
150	420	2100
75	440	2200
25	440	2200

Universal Motors S.A.
Rua Comendador Brandão, 484
4495-375 Póvoa de Varzim
geral@universalmotors.pt
TEL.: 252 299 080

Universal Motors UK, Ltd
Unit E2, Meltham Mills Road
West Yorkshire HD9 4AR
enquiries@universalmotors-group.co.uk
TEL.: +44(0) 1484660222

Universal Motors SL
C/La Habana n.6 nave 4 Pl Camporroso
28806 Alcala de Henares
info@universalmotors-group.es
TEL.: 918 864 213

PX22SC... Basic Gearbox
Riduttore base

Gearbox weight peso riduttore **3.70 kg**

M. flanges	Kit code	øF	A
63B5	K050.4.041	138	154.5
71B5	K050.4.042	160	152
56B14	KC40.4.049	80	152
63B14	K050.4.047	90	154.5
71B14	K050.4.045	105	152

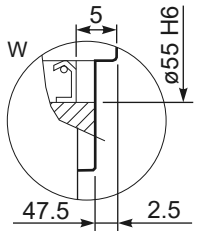

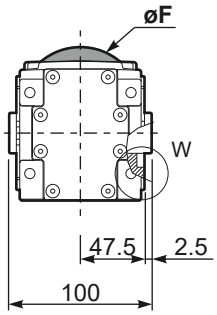

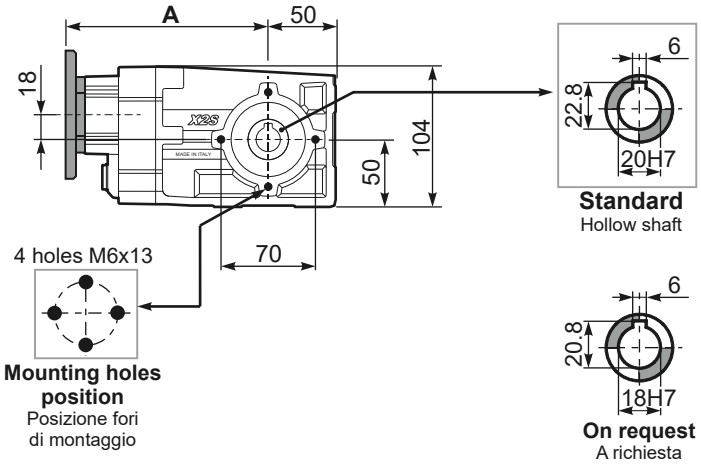

PX22S...FB.. Feet
Piedini

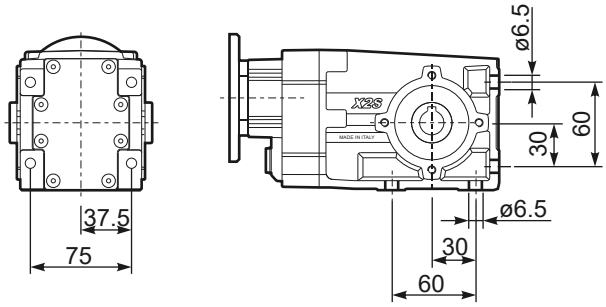

PX22S...-F1.. Output flange
Flangia uscita

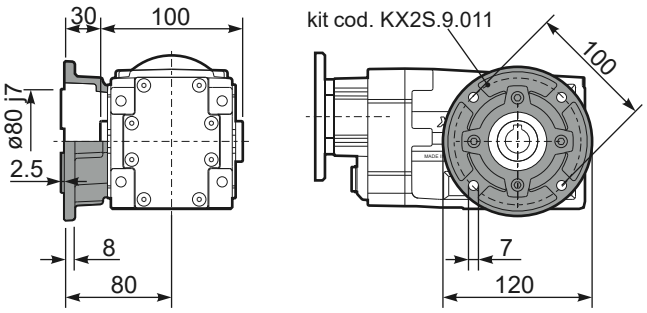

PX22SA.. Single output shaft
Albero semplice in uscita

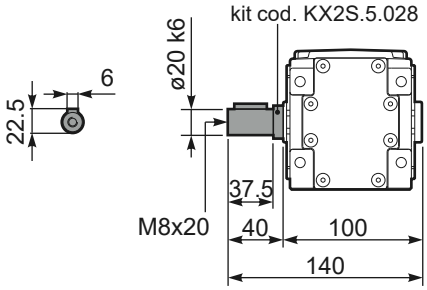

PX22S...BR.. Reaction Arm
Braccio di reazione

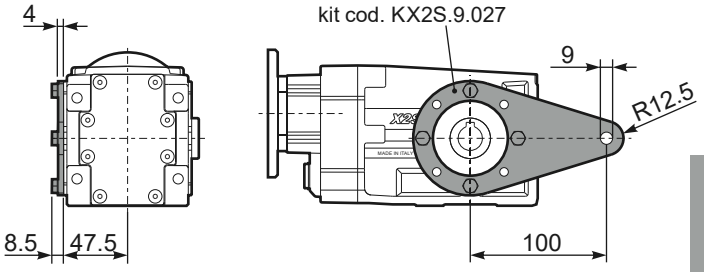

RX22S.. Input shaft
Albero in entrata

