Technical Data Sheet
Gearbox
HELLICAL BEVEL

| | | |
|---|---|---|
| MODEL | X32S | |
| Ø OUTPUT SHAFT | 20 | mm |
| APPROXIMATE RATIO | 20 | |
| EXACT RATIO | 20.30 | |
| OUTPUT SPEED | 73 | RPM |
| EXACT OUTPUT SPEED | 72 | RPM |
| INPUT POWER | 0.25 | KW |
| INPUT ROTATION | 1400 | RPM |
| INPUT PAM | 71B14 | |
| OUTPUT TORQUE | 33.23 | N.m |
| NOMINAL TORQUE | 90.00 | N.m |
| NOMINAL POWER | 0.68 | KW |
| SERVICE FACTOR | 2.72 | |
| DYNAMIC EFFICIENCY | 0.96 | |

## Oil Quantity (L)

| B3/H1 | B6/H4 | B7/H3 | B8/H2 | V5/H5 | V6/H6 |
|---|---|---|---|---|---|
| 0.4 | 0.6 | 0.4 | 0.6 | 0.85 | 0.6 |

## Radial and Axial Loads

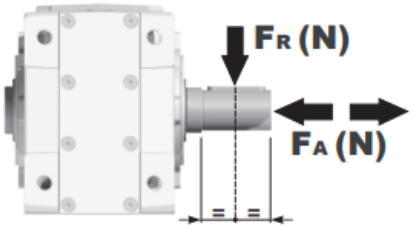


| $n_2$ [min-1] | FA [N] | FR [N] |
|---|---|---|
| 250 | 400 | 2000 |
| 100 | 500 | 2500 |
| 50 | 560 | 2800 |
| 15 | 560 | 2800 |

Universal Motors S.A.
Rua Comendador Brandão, 484
4495-375 Póvoa de Varzim
geral@universalmotors.pt
TEL.: 252 299 080

Universal Motors UK, Ltd
Unit E2, Meltham Mills Road
West Yorkshire HD9 4AR
enquiries@universalmotors-group.co.uk
TEL.: +44(0) 1484660222

Universal Motors SL
C/La Habana n.6 nave 4 Pl Camporroso
28806 Alcala de Henares
info@universalmotors-group.es
TEL.: 918 864 213

## PX32SC... Basic Gearbox
Riduttore base

| M. flanges | Kit code | øF | A |
|---|---|---|---|
| **63B5** | K063.4.041 | 140 | 184 |
| **71B5** | K063.4.042 | 160 | 182 |
| **80/90B5** | K063.4.043 | 200 | 184 |
| | | | |
| **71B14** | K063.4.047 | 105 | 182 |
| **80B14** | K063.4.046 | 120 | 184 |
| **90B14** | K063.4.041 | 140 | 184 |

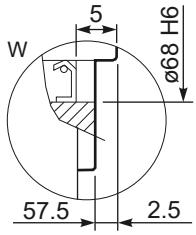


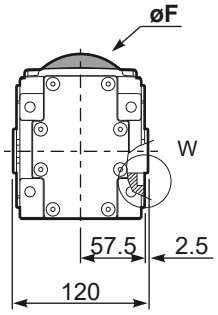


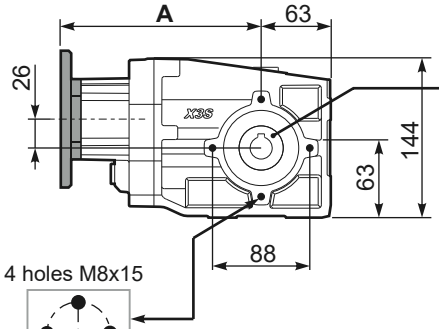


**Mounting holes position**
Posizione fori di montaggio

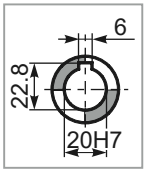


**Standard**
Hollow shaft

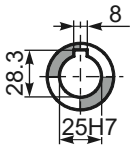


**On request**
A richiesta

**Gearbox weight** peso riduttore **6.30 kg**

## PX32S...FB.. Feet
Piedini

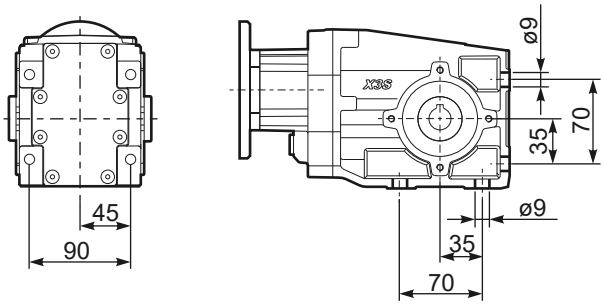


## PX32S...-F1.. Output flange
Flangia uscita

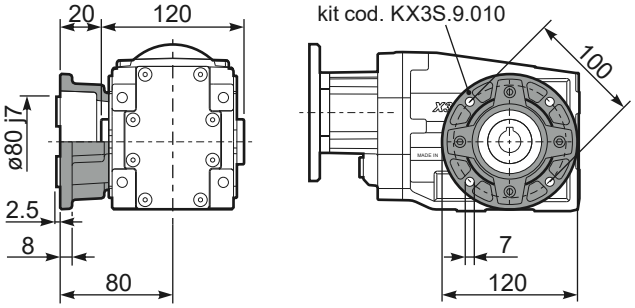


## PX32S...-F2.. Output flange
Flangia uscita

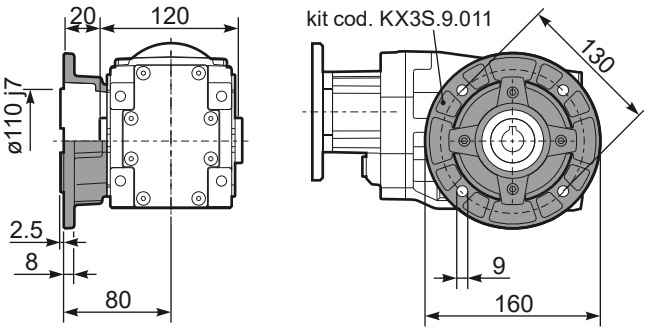


## PX32S...BR.. Reaction Arm
Braccio di reazione

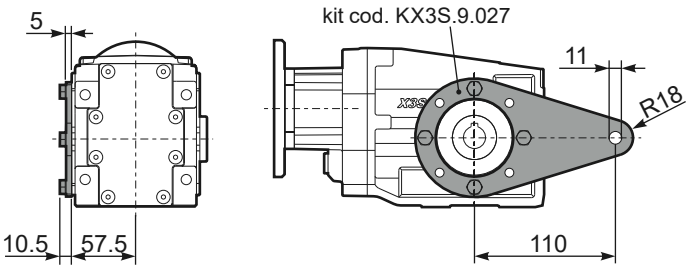


## RX32S... Input shaft
Albero in entrata

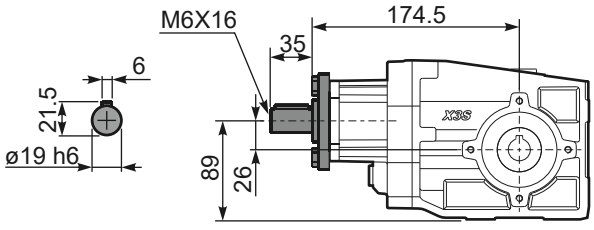


## PX32SA.. Single output shaft
Albero semplice in uscita

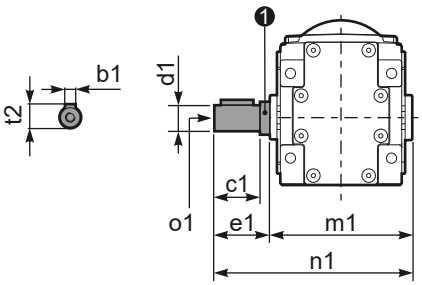


| d1 | b1 | c1 | e1 | m1 | n1 | t2 | o1 | ❶ kit code |
|---|---|---|---|---|---|---|---|---|
| ø20 k6 | 6 | 37.5 | 40 | 120 | 160 | 22.5 | M8x20 | KX2S.5.028 |
| ø25 $^{-0.005}_{-0.020}$ | 8 | 60 | 63.2 | 126.8 | 190 | 28 | M8x20 | K063.5.028 |