Technical Data Sheet
Gearbox
HELLICAL BEVEL

MODEL	X32S	
Ø OUTPUT SHAFT	20	mm
APPROXIMATE RATIO	33	
EXACT RATIO	32.97	
OUTPUT SPEED	44	RPM
EXACT OUTPUT SPEED	44	RPM
INPUT POWER	0.37	KW
INPUT ROTATION	1400	RPM
INPUT PAM	71B14	
OUTPUT TORQUE	79.88	N.m
NOMINAL TORQUE	90.00	N.m
NOMINAL POWER	0.42	KW
SERVICE FACTOR	1.14	
DYNAMIC EFFICIENCY	0.96	

Oil Quantity (L)

B3/H1	B6/H4	B7/H3	B8/H2	V5/H5	V6/H6
0.4	0.6	0.4	0.6	0.85	0.6

Radial and Axial Loads

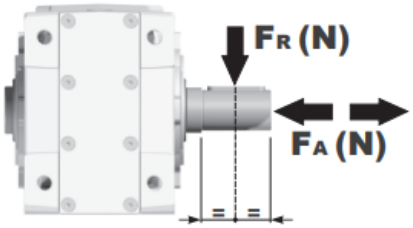

n_2 [min-1]	FA [N]	FR [N]
250	400	2000
100	500	2500
50	560	2800
15	560	2800

Universal Motors S.A.
Rua Comendador Brandão, 484
4495-375 Póvoa de Varzim
geral@universalmotors.pt
TEL.: 252 299 080

Universal Motors UK, Ltd
Unit E2, Meltham Mills Road
West Yorkshire HD9 4AR
enquiries@universalmotors-group.co.uk
TEL.: +44(0) 1484660222

Universal Motors SL
C/La Habana n.6 nave 4 Pl Camporroso
28806 Alcala de Henares
info@universalmotors-group.es
TEL.: 918 864 213

PX32SC... Basic Gearbox
Riduttore base

M. flanges	Kit code	øF	A
63B5	K063.4.041	140	184
71B5	K063.4.042	160	182
80/90B5	K063.4.043	200	184
71B14	K063.4.047	105	182
80B14	K063.4.046	120	184
90B14	K063.4.041	140	184

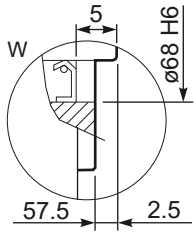

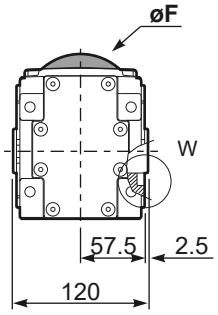

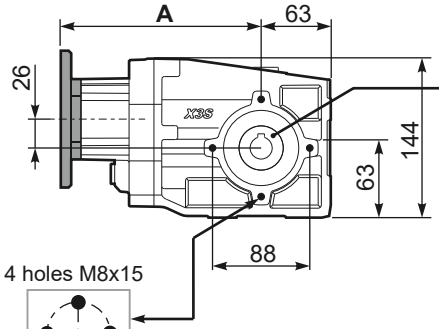

Mounting holes position
Posizione fori di montaggio

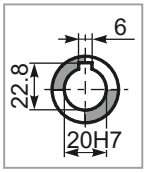

Standard
Hollow shaft

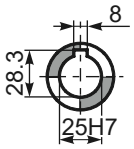

On request
A richiesta

Gearbox weight peso riduttore **6.30 kg**

PX32S...FB.. Feet
Piedini

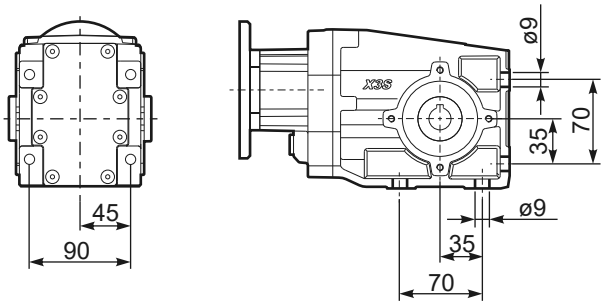

PX32S...-F1.. Output flange
Flangia uscita

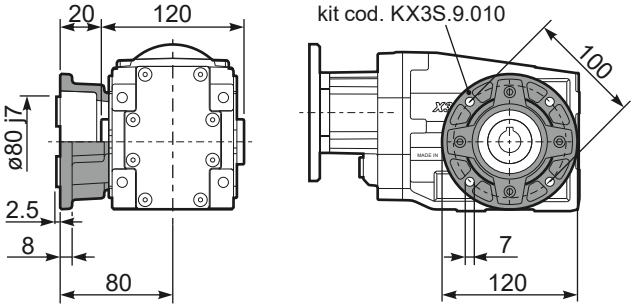

PX32S...-F2.. Output flange
Flangia uscita

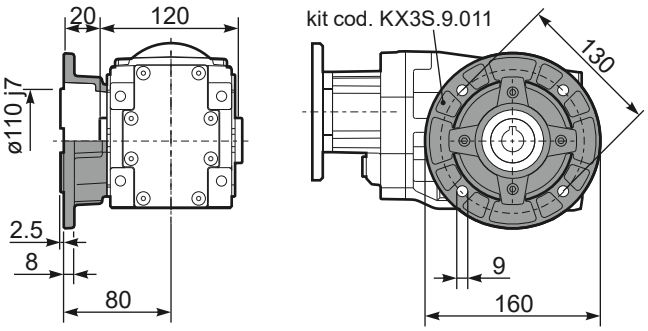

PX32S...BR.. Reaction Arm
Braccio di reazione

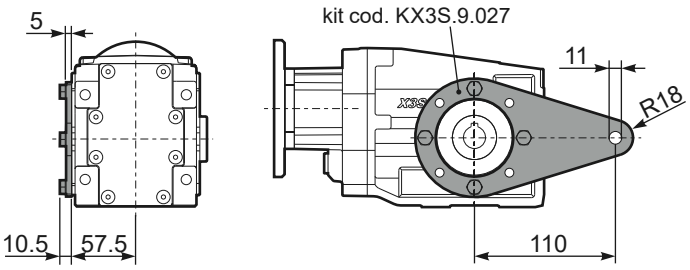

RX32S... Input shaft
Albero in entrata

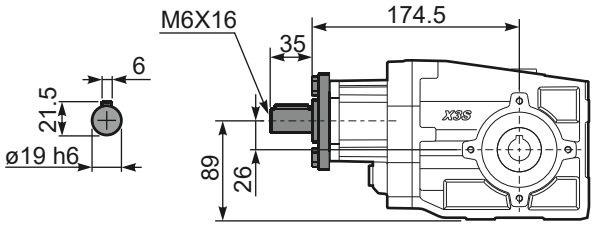

PX32SA.. Single output shaft
Albero semplice in uscita

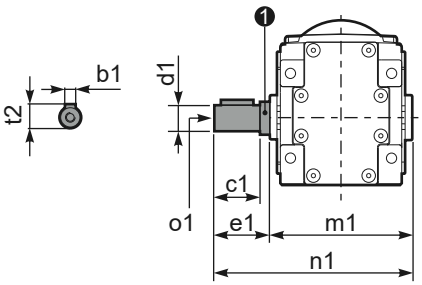

d1	b1	c1	e1	m1	n1	t2	o1	❶ kit code
ø20 k6	6	37.5	40	120	160	22.5	M8x20	KX2S.5.028
ø25 $^{-0.005}_{-0.020}$	8	60	63.2	126.8	190	28	M8x20	K063.5.028