Technical Data Sheet
Gearbox
# HELLICAL BEVEL

| | | |
|---|---|---|
| MODEL | X33S | |
| Ø OUTPUT SHAFT | 20 | mm |
| APPROXIMATE RATIO | 36 | |
| EXACT RATIO | 36.17 | |
| OUTPUT SPEED | 41 | RPM |
| EXACT OUTPUT SPEED | 40 | RPM |
| INPUT POWER | 0.25 | KW |
| INPUT ROTATION | 1400 | RPM |
| INPUT PAM | 71B14 | |
| OUTPUT TORQUE | 57.98 | N.m |
| NOMINAL TORQUE | 100.00 | N.m |
| NOMINAL POWER | 0.43 | KW |
| SERVICE FACTOR | 1.72 | |
| DYNAMIC EFFICIENCY | 0.94 | |

## Oil Quantity (L)

| B3/H1 | B6/H4 | B7/H3 | B8/H2 | V5/H5 | V6/H6 |
|---|---|---|---|---|---|
| 0.7 | 0.65 | 0.4 | 0.65 | 0.95 | 0.65 |

## Radial and Axial Loads

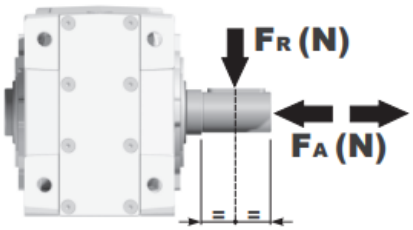


| $n_2$ [min-1] | FA [N] | FR [N] |
|---|---|---|
| 250 | 400 | 2000 |
| 100 | 500 | 2500 |
| 50 | 560 | 2800 |
| 15 | 560 | 2800 |

Universal Motors S.A.
Rua Comendador Brandão, 484
4495-375 Póvoa de Varzim
geral@universalmotors.pt
TEL.: 252 299 080

Universal Motors UK, Ltd
Unit E2, Meltham Mills Road
West Yorkshire HD9 4AR
enquiries@universalmotors-group.co.uk
TEL.: +44(0) 1484660222

Universal Motors SL
C/La Habana n.6 nave 4 Pl Camporroso
28806 Alcala de Henares
info@universalmotors-group.es
TEL.: 918 864 213

## PX33SC... Basic Gearbox
Riduttore base

Gearbox weight / peso riduttore: **6.55 kg**

| M. flanges | Kit code | øF | A |
|---|---|---|---|
| **63B5** | K050.4.041 | 138 | 189.5 |
| **71B5** | K050.4.042 | 160 | 187 |
| | | | |
| **56B14** | KC40.4.049 | 80 | 187 |
| **63B14** | K050.4.047 | 90 | 189.5 |
| **71B14** | K050.4.045 | 105 | 187 |

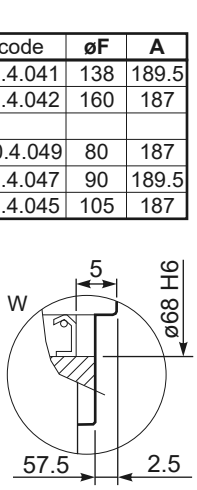


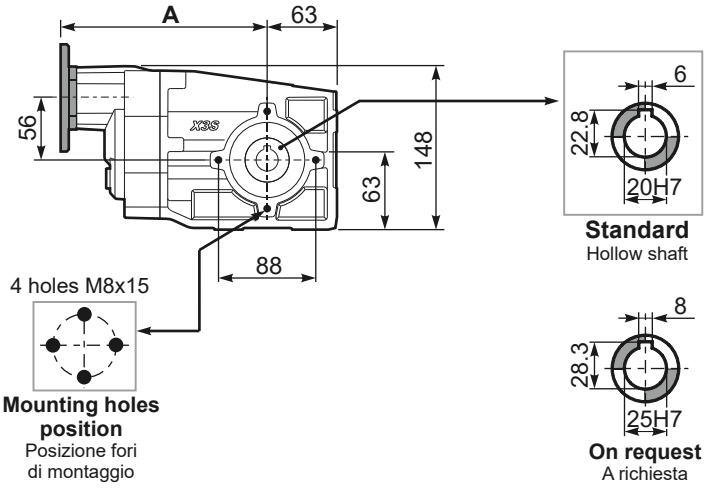


## PX33S...FB.. Feet
Piedini

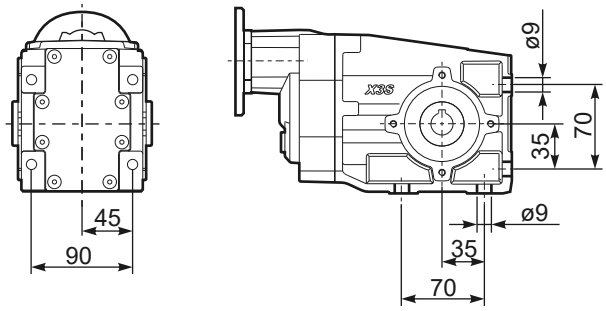


## PX33S...-F1.. Output flange
Flangia uscita

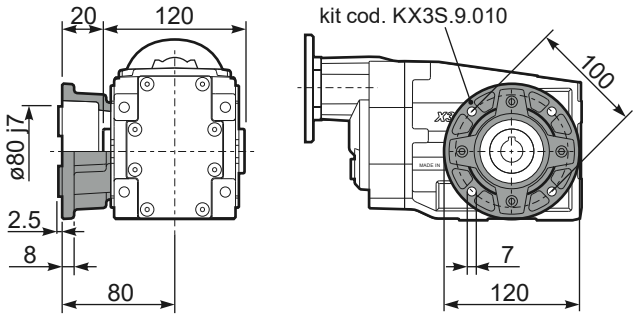


## PX33S...-F2.. Output flange
Flangia uscita

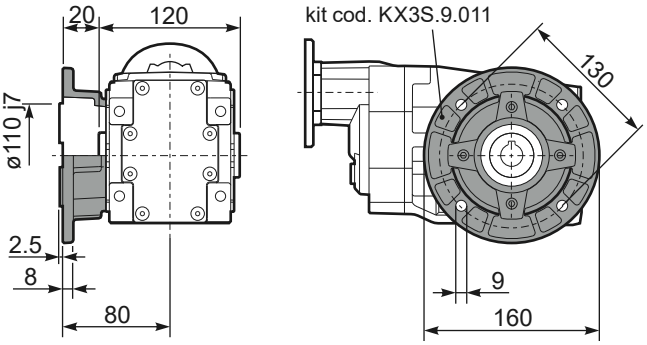


## PX33S...BR.. Reaction Arm
Braccio di reazione

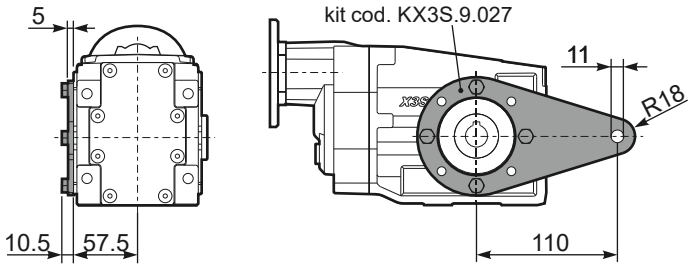


## RX33S... Input shaft
Albero in entrata

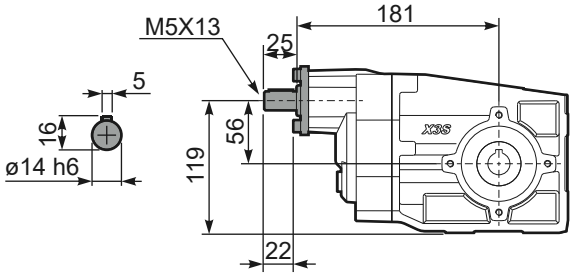


## PX33SA.. Single output shaft
Albero semplice in uscita

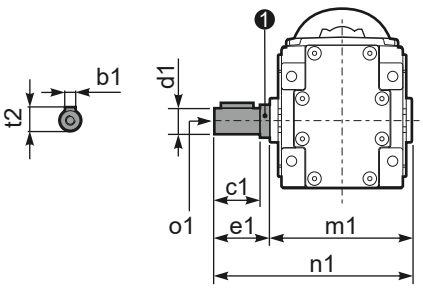


| d1 | b1 | c1 | e1 | m1 | n1 | t2 | o1 | ❶ kit code |
|---|---|---|---|---|---|---|---|---|
| ø20 k6 | 6 | 37.5 | 40 | 120 | 160 | 22.5 | M8x20 | KX2S.5.028 |
| ø25 $^{-0.005}_{-0.020}$ | 8 | 60 | 63.2 | 126.8 | 190 | 28 | M8x20 | K063.5.028 |

9