Technical Data Sheet
Gearbox
HELLICAL BEVEL

MODEL	X33S	
Ø OUTPUT SHAFT	20	mm
APPROXIMATE RATIO	72	
EXACT RATIO	72.25	
OUTPUT SPEED	20	RPM
EXACT OUTPUT SPEED	20	RPM
INPUT POWER	0.18	KW
INPUT ROTATION	1400	RPM
INPUT PAM	63B14	
OUTPUT TORQUE	83.38	N.m
NOMINAL TORQUE	100.00	N.m
NOMINAL POWER	0.22	KW
SERVICE FACTOR	1.22	
DYNAMIC EFFICIENCY	0.94	

Oil Quantity (L)

B3/H1	B6/H4	B7/H3	B8/H2	V5/H5	V6/H6
0.7	0.65	0.4	0.65	0.95	0.65

Radial and Axial Loads

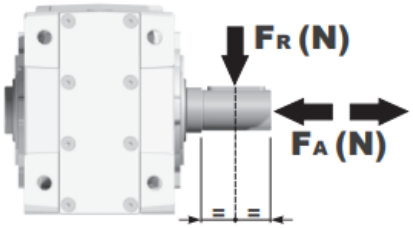

n_2 [min-1]	FA [N]	FR [N]
250	400	2000
100	500	2500
50	560	2800
15	560	2800

Universal Motors S.A.
Rua Comendador Brandão, 484
4495-375 Póvoa de Varzim
geral@universalmotors.pt
TEL.: 252 299 080

Universal Motors UK, Ltd
Unit E2, Meltham Mills Road
West Yorkshire HD9 4AR
enquiries@universalmotors-group.co.uk
TEL.: +44(0) 1484660222

Universal Motors SL
C/La Habana n.6 nave 4 Pl Camporroso
28806 Alcala de Henares
info@universalmotors-group.es
TEL.: 918 864 213

PX33SC... Basic Gearbox
Riduttore base

Gearbox weight / peso riduttore: **6.55 kg**

M. flanges	Kit code	øF	A
63B5	K050.4.041	138	189.5
71B5	K050.4.042	160	187
56B14	KC40.4.049	80	187
63B14	K050.4.047	90	189.5
71B14	K050.4.045	105	187

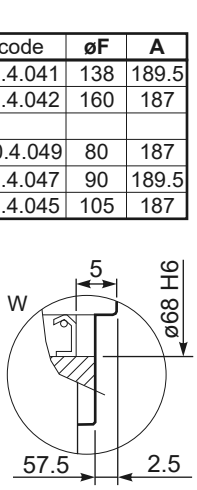

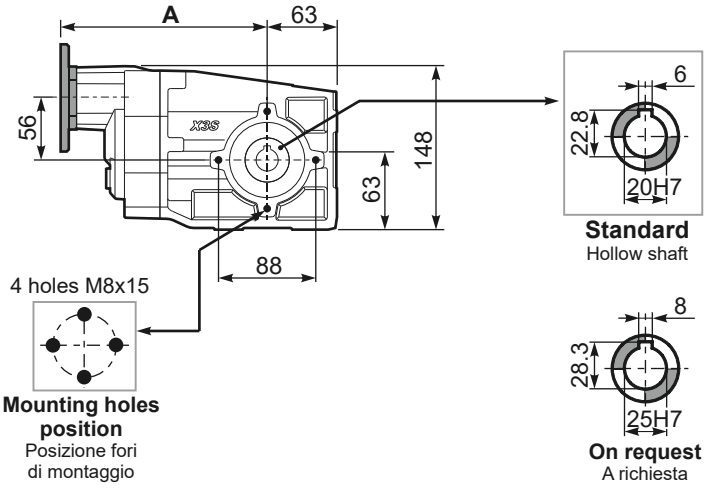

PX33S...FB.. Feet
Piedini

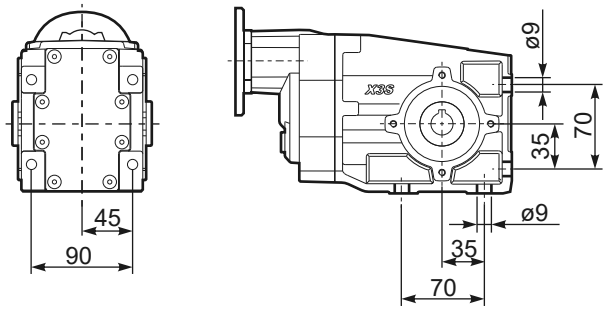

PX33S...-F1.. Output flange
Flangia uscita

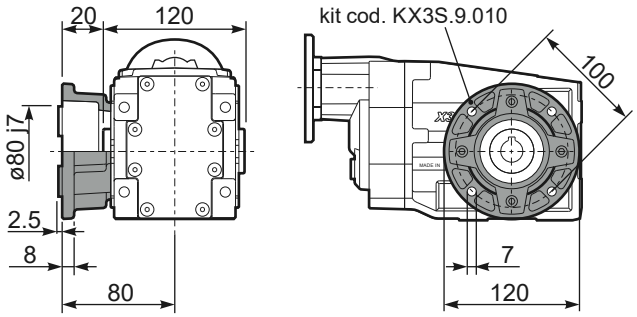

PX33S...-F2.. Output flange
Flangia uscita

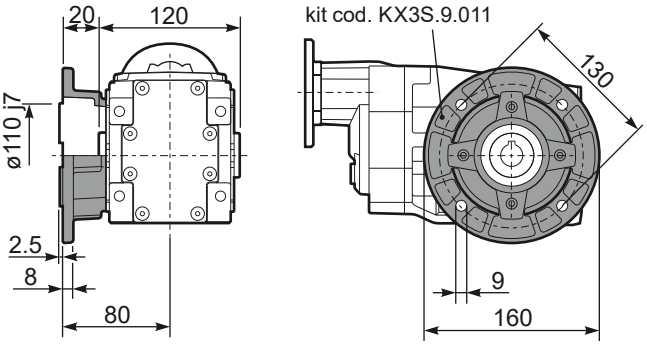

PX33S...BR.. Reaction Arm
Braccio di reazione

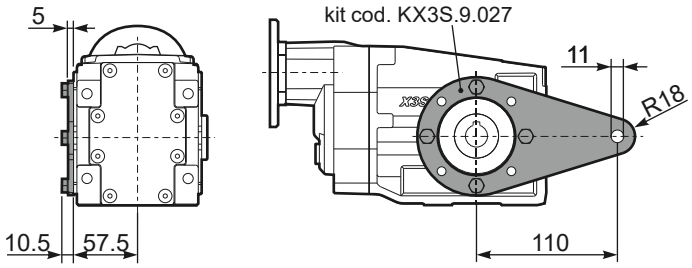

RX33S... Input shaft
Albero in entrata

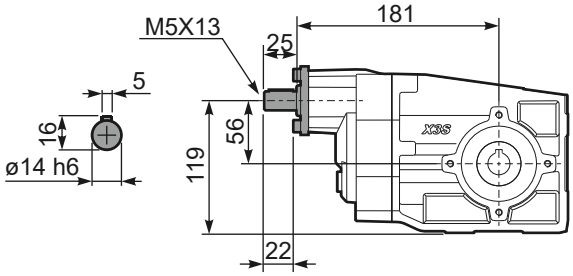

PX33SA.. Single output shaft
Albero semplice in uscita

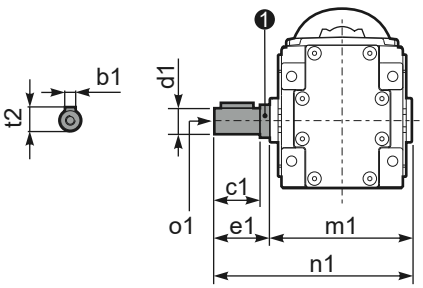

d1	b1	c1	e1	m1	n1	t2	o1	❶ kit code
ø20 k6	6	37.5	40	120	160	22.5	M8x20	KX2S.5.028
ø25 $^{-0.005}_{-0.020}$	8	60	63.2	126.8	190	28	M8x20	K063.5.028

9