Technical Data Sheet
Gearbox
HELLICAL BEVEL

| | | |
|---|---|---|
| MODEL | X42A | |
| Ø OUTPUT SHAFT | 25 | mm |
| APPROXIMATE RATIO | 28 | |
| EXACT RATIO | 27.55 | |
| OUTPUT SPEED | 52 | RPM |
| EXACT OUTPUT SPEED | 53 | RPM |
| INPUT POWER | 1.10 | KW |
| INPUT ROTATION | 1400 | RPM |
| INPUT PAM | 90B14 | |
| OUTPUT TORQUE | 198.44 | N.m |
| NOMINAL TORQUE | 150.00 | N.m |
| NOMINAL POWER | 0.83 | KW |
| SERVICE FACTOR | 0.75 | |
| DYNAMIC EFFICIENCY | 0.96 | |

## Oil Quantity (L)

| B3/H1 | B6/H4 | B7/H3 | B8/H2 | V5/H5 | V6/H6 |
|---|---|---|---|---|---|
| 0.6 | 0.75 | 0.5 | 0.7 | 1.1 | 0.6 |

## Radial and Axial Loads

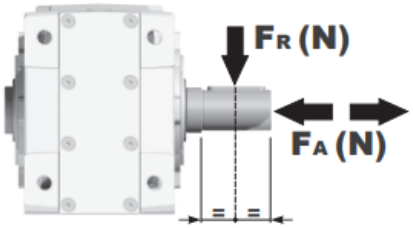


| $n_2$ [min-1] | FA [N] | FR [N] |
|---|---|---|
| 250 | 500 | 2500 |
| 100 | 700 | 3500 |
| 50 | 960 | 4800 |
| 15 | 960 | 4800 |

Universal Motors S.A.
Rua Comendador Brandão, 484
4495-375 Póvoa de Varzim
geral@universalmotors.pt
TEL.: 252 299 080

Universal Motors UK, Ltd
Unit E2, Meltham Mills Road
West Yorkshire HD9 4AR
enquiries@universalmotors-group.co.uk
TEL.: +44(0) 1484660222

Universal Motors SL
C/La Habana n.6 nave 4 Pl Camporroso
28806 Alcala de Henares
info@universalmotors-group.es
TEL.: 918 864 213

## PX42AC... Basic Gearbox
Riduttore base

| Gearbox weight peso riduttore | 7.82 kg |
|---|---|

| M. flanges | Kit code | øF | A |
|---|---|---|---|
| **63B5** | K063.4.041 | 140 | 199.5 |
| **71B5** | K063.4.042 | 160 | 197.5 |
| **80/90B5** | K063.4.043 | 200 | 199.5 |
| **100/112B5** | KC40.4.043 | 250 | 214.3 |
| | | | |
| **71B14** | K063.4.047 | 105 | 197.5 |
| **80B14** | K063.4.046 | 120 | 199.5 |
| **90B14** | K063.4.041 | 140 | 199.5 |
| **100/112B14** | KC40.4.041 | 160 | 214.5 |

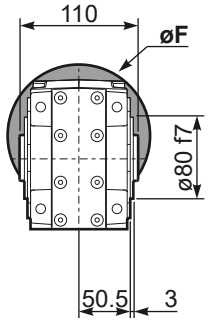


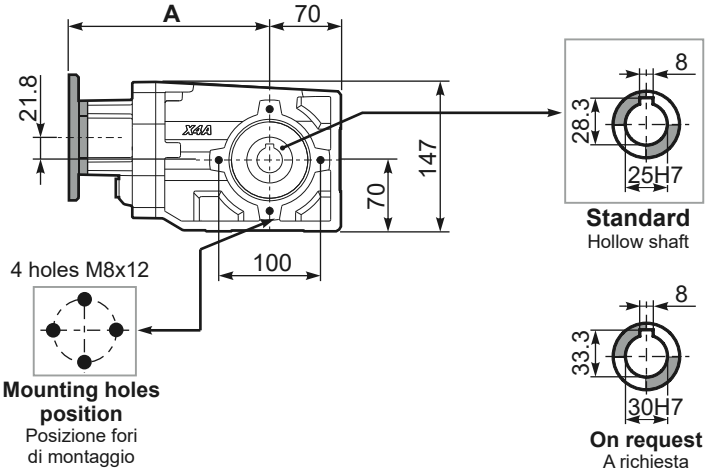


## PX42A...FB.. Feet
Piedini

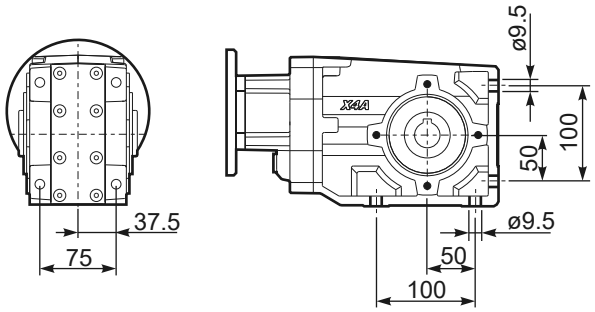


## PX42A...-F2.. Output flange
Flangia uscita

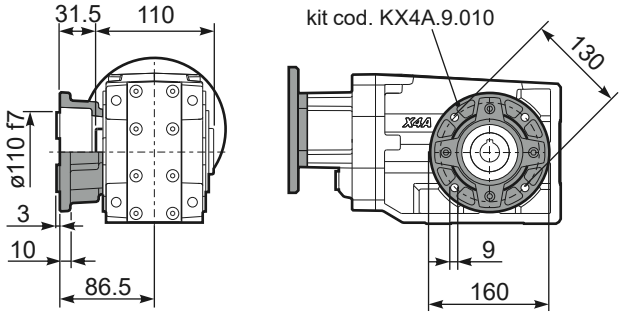


## PX42A...-F3.. Output flange
Flangia uscita

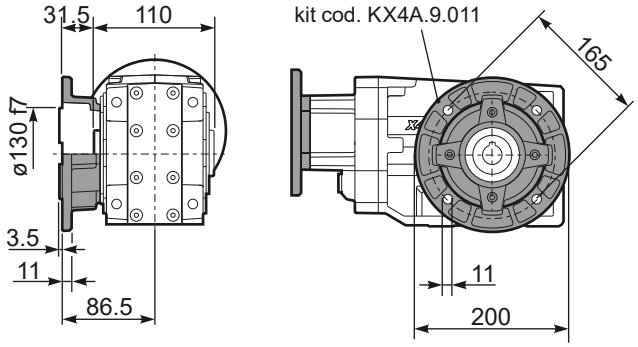


## PX42A...BR.. Reaction Arm
Braccio di reazione

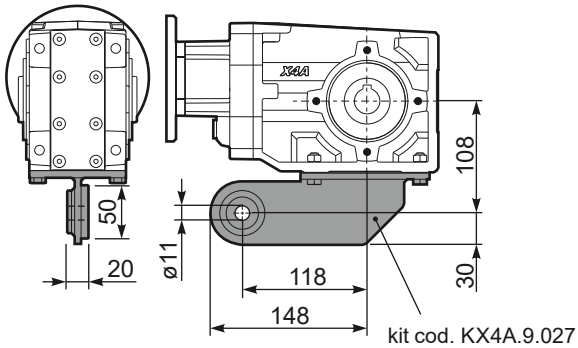


## RX42A... Input shaft
Albero in entrata

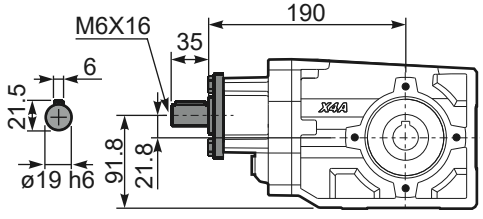


## PX42AA.. Single output shaft
Albero semplice in uscita

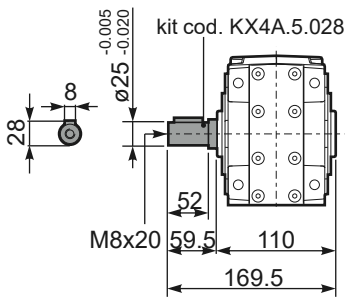


9