Technical Data Sheet
Gearbox
HELLICAL BEVEL

MODEL	X42A	
Ø OUTPUT SHAFT	25	mm
APPROXIMATE RATIO	20	
EXACT RATIO	20.25	
OUTPUT SPEED	73	RPM
EXACT OUTPUT SPEED	72	RPM
INPUT POWER	0.75	KW
INPUT ROTATION	1400	RPM
INPUT PAM	80B5	
OUTPUT TORQUE	99.45	N.m
NOMINAL TORQUE	150.00	N.m
NOMINAL POWER	1.1	KW
SERVICE FACTOR	1.47	
DYNAMIC EFFICIENCY	0.96	

Oil Quantity (L)

B3/H1	B6/H4	B7/H3	B8/H2	V5/H5	V6/H6
0.6	0.75	0.5	0.7	1.1	0.6

Radial and Axial Loads

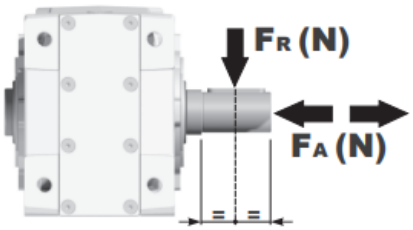

n_2 [min-1]	FA [N]	FR [N]
250	500	2500
100	700	3500
50	960	4800
15	960	4800

Universal Motors S.A.
Rua Comendador Brandão, 484
4495-375 Póvoa de Varzim
geral@universalmotors.pt
TEL.: 252 299 080

Universal Motors UK, Ltd
Unit E2, Meltham Mills Road
West Yorkshire HD9 4AR
enquiries@universalmotors-group.co.uk
TEL.: +44(0) 1484660222

Universal Motors SL
C/La Habana n.6 nave 4 Pl Camporroso
28806 Alcala de Henares
info@universalmotors-group.es
TEL.: 918 864 213

PX42AC... Basic Gearbox
Riduttore base

Gearbox weight peso riduttore	7.82 kg

M. flanges	Kit code	øF	A
63B5	K063.4.041	140	199.5
71B5	K063.4.042	160	197.5
80/90B5	K063.4.043	200	199.5
100/112B5	KC40.4.043	250	214.3
71B14	K063.4.047	105	197.5
80B14	K063.4.046	120	199.5
90B14	K063.4.041	140	199.5
100/112B14	KC40.4.041	160	214.5

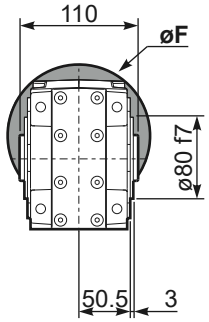

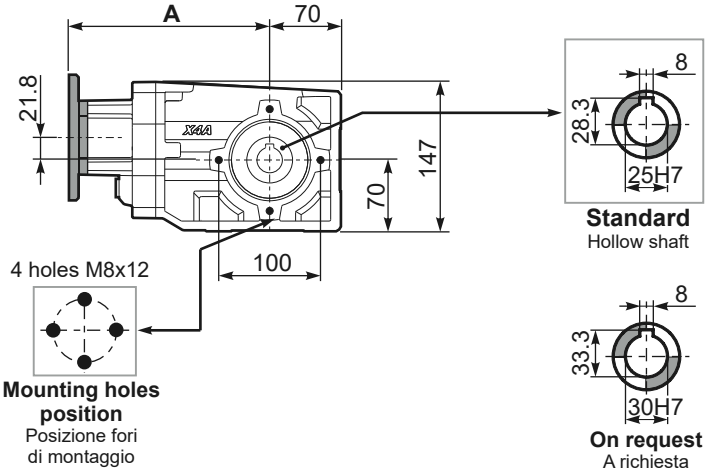

PX42A...FB.. Feet
Piedini

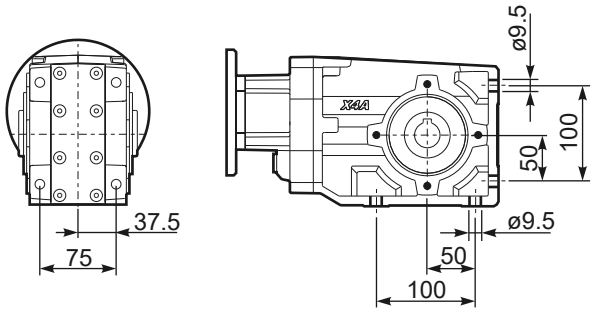

PX42A...-F2.. Output flange
Flangia uscita

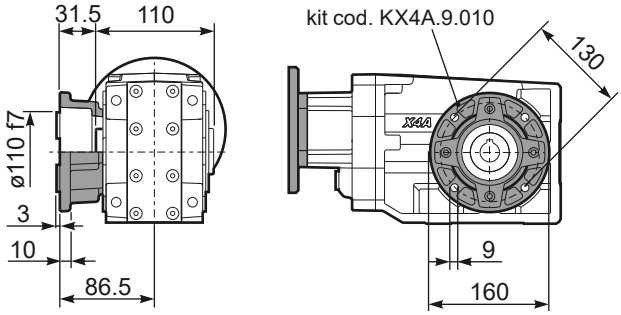

PX42A...-F3.. Output flange
Flangia uscita

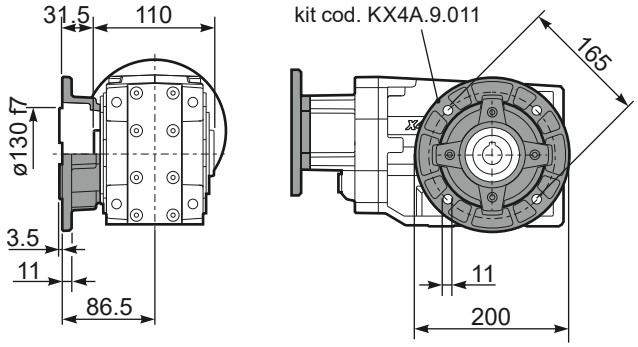

PX42A...BR.. Reaction Arm
Braccio di reazione

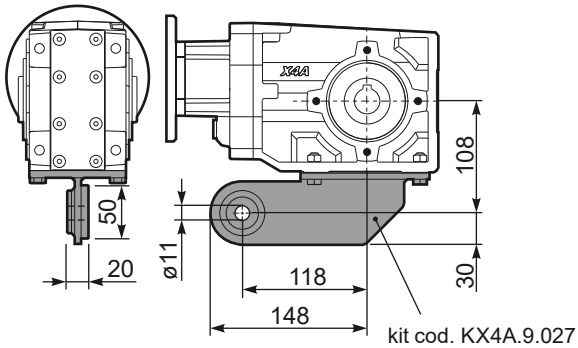

RX42A... Input shaft
Albero in entrata

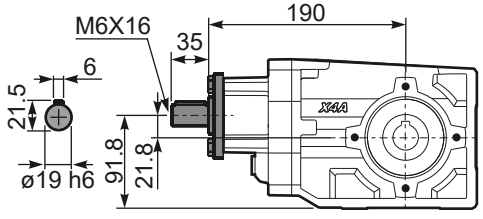

PX42AA.. Single output shaft
Albero semplice in uscita

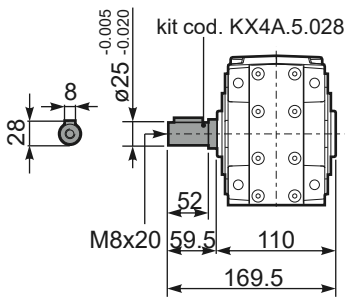

9