Technical Data Sheet
Gearbox
HELLICAL BEVEL

MODEL	X43A	
Ø OUTPUT SHAFT	25	mm
APPROXIMATE RATIO	210	
EXACT RATIO	210.42	
OUTPUT SPEED	7	RPM
EXACT OUTPUT SPEED	7	RPM
INPUT POWER	0.09	KW
INPUT ROTATION	1400	RPM
INPUT PAM	56B14	
OUTPUT TORQUE	121.42	N.m
NOMINAL TORQUE	150.00	N.m
NOMINAL POWER	0.12	KW
SERVICE FACTOR	1.33	
DYNAMIC EFFICIENCY	0.94	

Oil Quantity (L)

B3/H1	B6/H4	B7/H3	B8/H2	V5/H5	V6/H6
0.8	0.8	0.6	0.8	1.2	0.7

Radial and Axial Loads

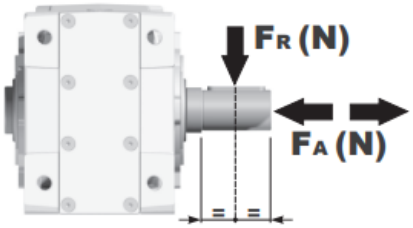

n_2 [min-1]	FA [N]	FR [N]
250	500	2500
100	700	3500
50	960	4800
15	960	4800

Universal Motors S.A.
Rua Comendador Brandão, 484
4495-375 Póvoa de Varzim
geral@universalmotors.pt
TEL.: 252 299 080

Universal Motors UK, Ltd
Unit E2, Meltham Mills Road
West Yorkshire HD9 4AR
enquiries@universalmotors-group.co.uk
TEL.: +44(0) 1484660222

Universal Motors SL
C/La Habana n.6 nave 4 Pl Camporroso
28806 Alcala de Henares
info@universalmotors-group.es
TEL.: 918 864 213

PX43AC... Basic Gearbox
Riduttore base

Gearbox weight peso riduttore	7.93 kg

M. flanges	Kit code	øF	A
63B5	K050.4.041	138	205
71B5	K050.4.042	160	202.5
56B14	KC40.4.049	80	202.5
63B14	K050.4.047	90	205
71B14	K050.4.045	105	202.5

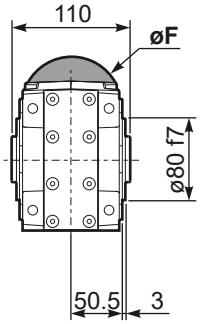

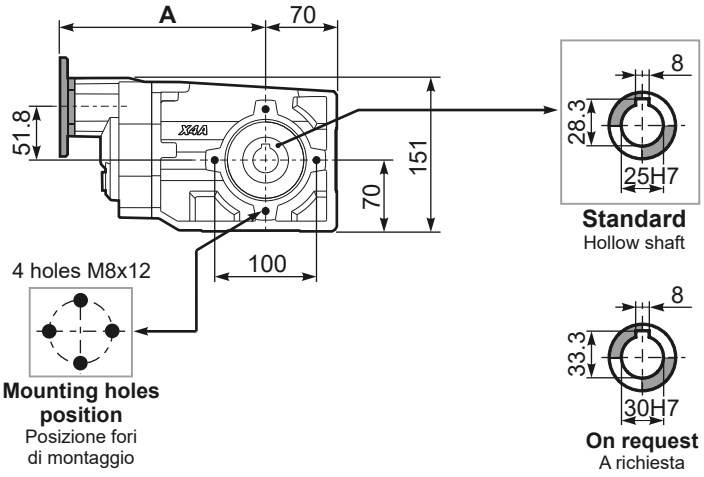

PX43A...FB.. Feet
Piedini

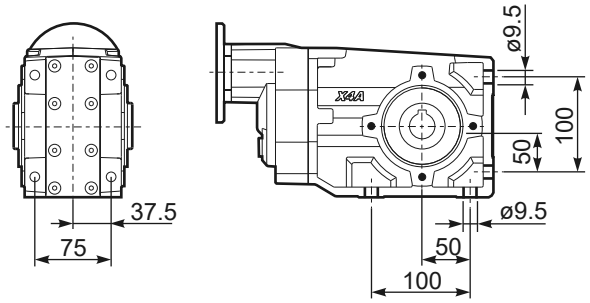

PX43A...-F2.. Output flange
Flangia uscita

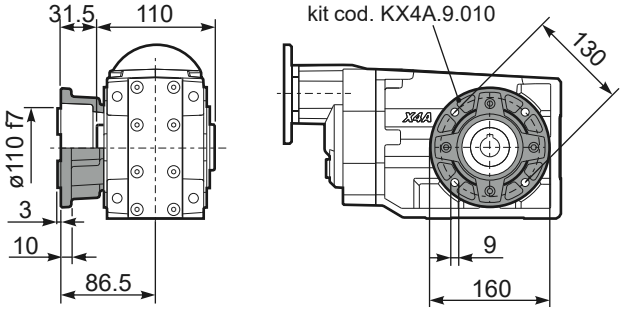

PX43A...-F3.. Output flange
Flangia uscita

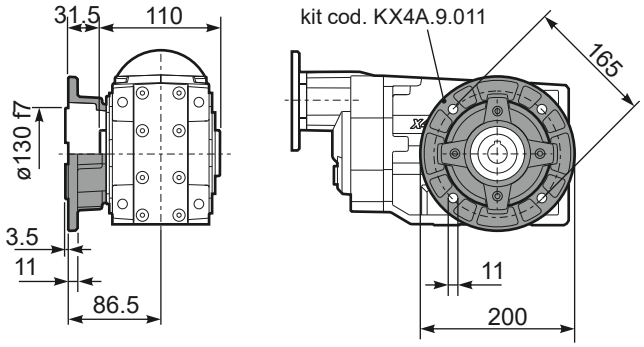

PX43A...BR.. Reaction Arm
Braccio di reazione

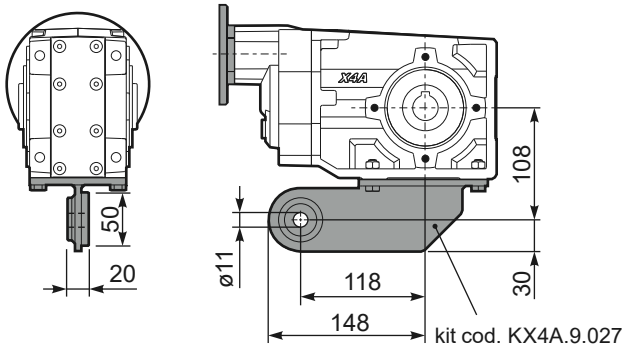

RX43A... Input shaft
Albero in entrata

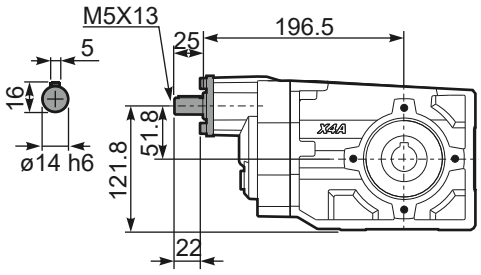

PX43AA.. Single output shaft
Albero semplice in uscita

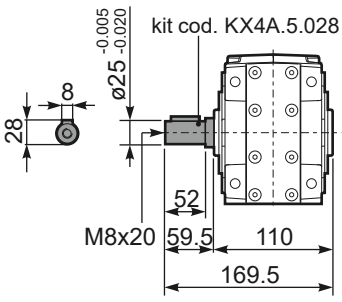

9