Technical Data Sheet
Gearbox
# HELLICAL BEVEL

| | | |
|---|---|---|
| MODEL | X52A | |
| Ø OUTPUT SHAFT | 30 | mm |
| APPROXIMATE RATIO | 17 | |
| EXACT RATIO | 17.46 | |
| OUTPUT SPEED | 86 | RPM |
| EXACT OUTPUT SPEED | 84 | RPM |
| INPUT POWER | 1.10 | KW |
| INPUT ROTATION | 1400 | RPM |
| INPUT PAM | 90B14 | |
| OUTPUT TORQUE | 125.76 | N.m |
| NOMINAL TORQUE | 250.00 | N.m |
| NOMINAL POWER | 2.2 | KW |
| SERVICE FACTOR | 2.00 | |
| DYNAMIC EFFICIENCY | 0.96 | |

## Oil Quantity (L)

| B3/H1 | B6/H4 | B7/H3 | B8/H2 | V5/H5 | V6/H6 |
|---|---|---|---|---|---|
| 0.9 | 1.5 | 0.75 | 1.4 | 1.95 | 1.15 |

## Radial and Axial Loads

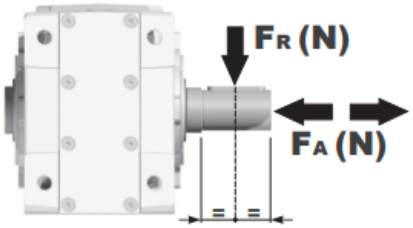


| $n_2$ [min-1] | FA [N] | FR [N] |
|---|---|---|
| 250 | 600 | 3000 |
| 100 | 800 | 4000 |
| 50 | 960 | 4800 |
| 15 | 1660 | 8300 |

Universal Motors S.A.
Rua Comendador Brandão, 484
4495-375 Póvoa de Varzim
geral@universalmotors.pt
TEL.: 252 299 080

Universal Motors UK, Ltd
Unit E2, Meltham Mills Road
West Yorkshire HD9 4AR
enquiries@universalmotors-group.co.uk
TEL.: +44(0) 1484660222

Universal Motors SL
C/La Habana n.6 nave 4 Pl Camporroso
28806 Alcala de Henares
info@universalmotors-group.es
TEL.: 918 864 213

## PX52AC... Basic Gearbox
Riduttore base

Gearbox weight / peso riduttore: **12.80 kg**

| M. flanges | Kit code | øF | A |
|---|---|---|---|
| **71B5** | K023.4.041 | 160 | 234 |
| **80/90B5** | K023.4.042 | 200 | 236 |
| **100/112B5** | K023.4.043 | 250 | 245 |
| | | | |
| **80B14** | K085.4.046 | 120 | 236 |
| **90B14** | K085.4.045 | 140 | 236 |
| **100/112B14** | K085.4.047 | 160 | 245 |

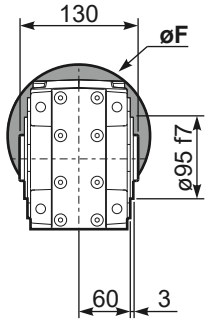


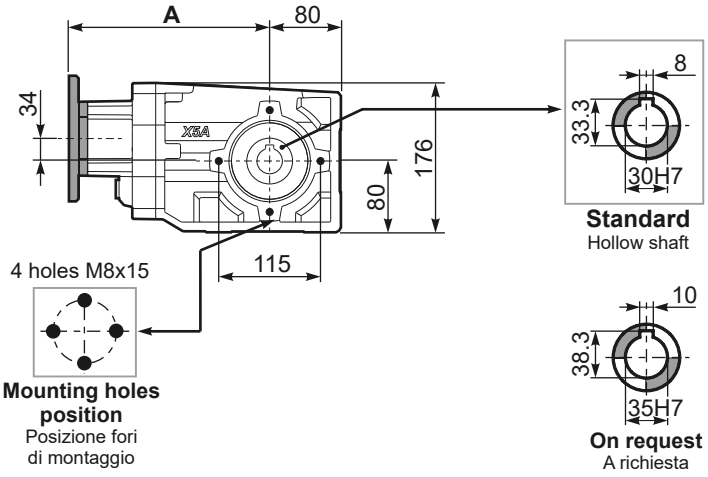


## PX52A...FB.. Feet
Piedini

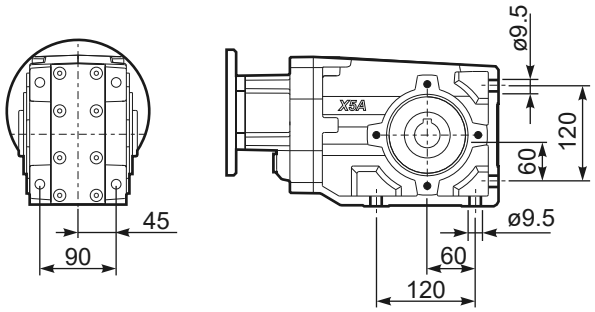


## PX52A...-F2.. Output flange
Flangia uscita

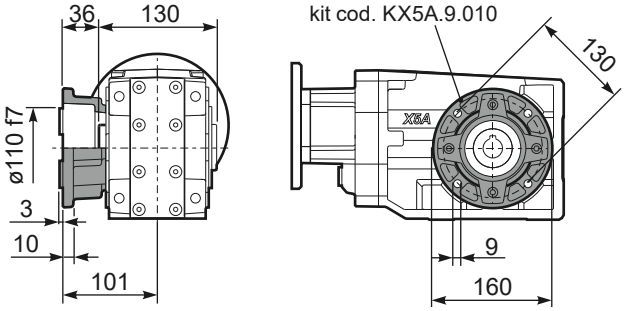


## PX52A...-F3.. Output flange
Flangia uscita

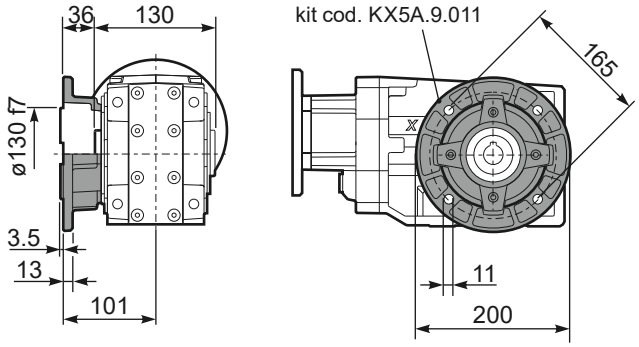


## PX52A...-F4.. Output flange
Flangia uscita

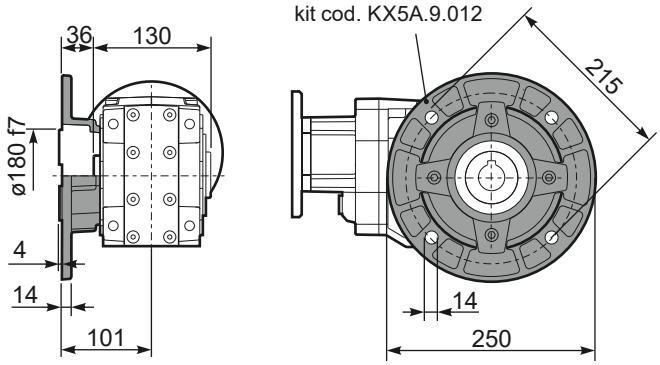


## RX52A... Input shaft
Albero in entrata

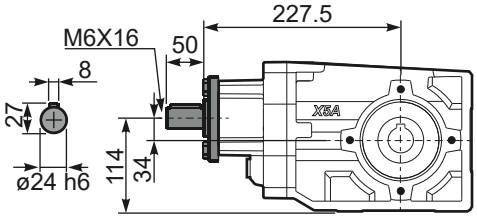


## PX52A...BR.. Reaction Arm
Braccio di reazione

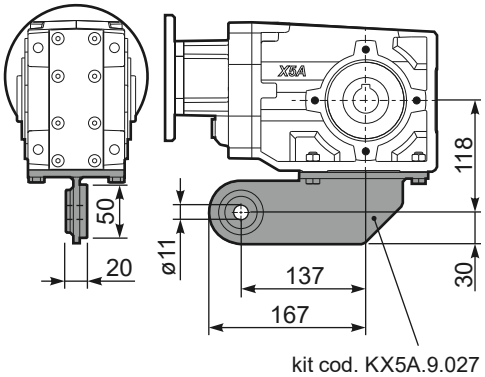


## PX52AA.. Single output shaft
Albero semplice in uscita

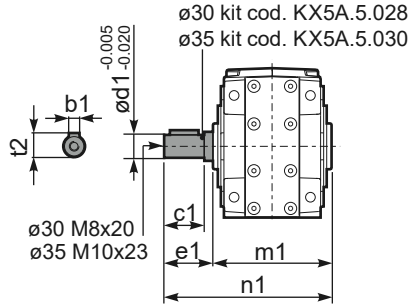


| | b1 | c1 | d1 | e1 | m1 | n1 | t2 |
|---|---|---|---|---|---|---|---|
| **ø30** | 8 | 60 | 30 | 68 | 134 | 202 | 33 |
| **ø35** | 10 | 60 | 35 | 73.5 | 141 | 214.5 | 38 |

9