Technical Data Sheet
Gearbox
HELLICAL BEVEL

MODEL	X52A	
Ø OUTPUT SHAFT	30	mm
APPROXIMATE RATIO	38	
EXACT RATIO	37.57	
OUTPUT SPEED	38	RPM
EXACT OUTPUT SPEED	39	RPM
INPUT POWER	0.55	KW
INPUT ROTATION	1400	RPM
INPUT PAM	80B5	
OUTPUT TORQUE	135.31	N.m
NOMINAL TORQUE	250.00	N.m
NOMINAL POWER	1	KW
SERVICE FACTOR	1.82	
DYNAMIC EFFICIENCY	0.96	

Oil Quantity (L)

B3/H1	B6/H4	B7/H3	B8/H2	V5/H5	V6/H6
0.9	1.5	0.75	1.4	1.95	1.15

Radial and Axial Loads

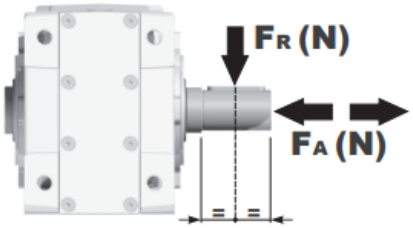

n_2 [min-1]	FA [N]	FR [N]
250	600	3000
100	800	4000
50	960	4800
15	1660	8300

Universal Motors S.A.
Rua Comendador Brandão, 484
4495-375 Póvoa de Varzim
geral@universalmotors.pt
TEL.: 252 299 080

Universal Motors UK, Ltd
Unit E2, Meltham Mills Road
West Yorkshire HD9 4AR
enquiries@universalmotors-group.co.uk
TEL.: +44(0) 1484660222

Universal Motors SL
C/La Habana n.6 nave 4 Pl Camporroso
28806 Alcala de Henares
info@universalmotors-group.es
TEL.: 918 864 213

PX52AC... Basic Gearbox
Riduttore base

Gearbox weight / peso riduttore: **12.80 kg**

M. flanges	Kit code	øF	A
71B5	K023.4.041	160	234
80/90B5	K023.4.042	200	236
100/112B5	K023.4.043	250	245
80B14	K085.4.046	120	236
90B14	K085.4.045	140	236
100/112B14	K085.4.047	160	245

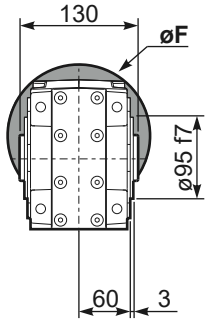

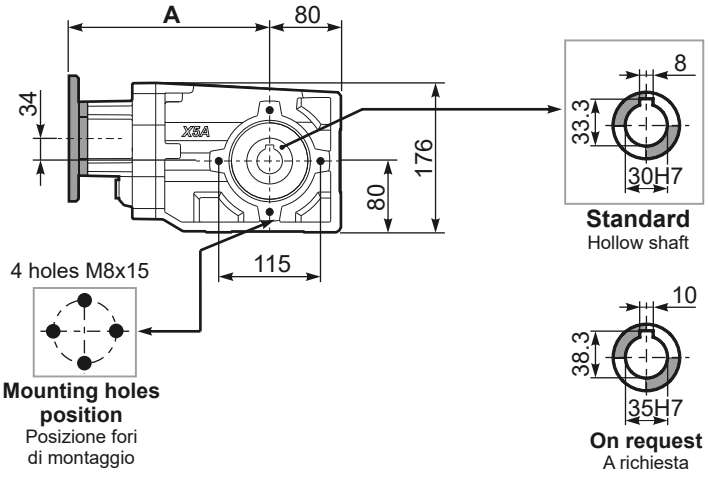

PX52A...FB.. Feet
Piedini

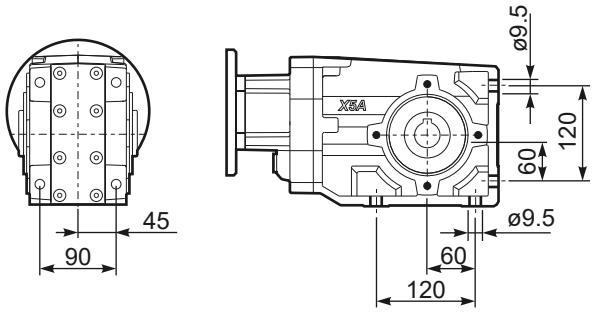

PX52A...-F2.. Output flange
Flangia uscita

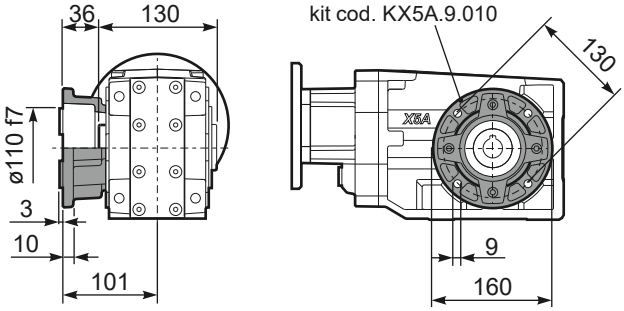

PX52A...-F3.. Output flange
Flangia uscita

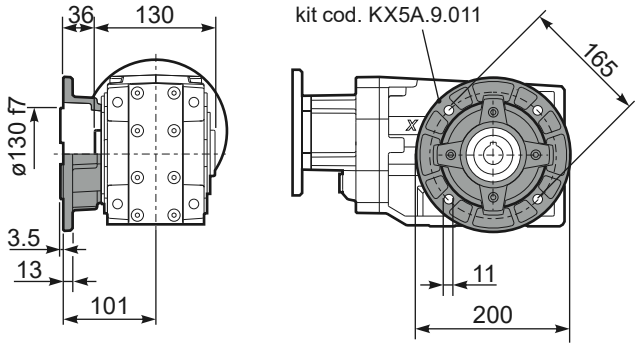

PX52A...-F4.. Output flange
Flangia uscita

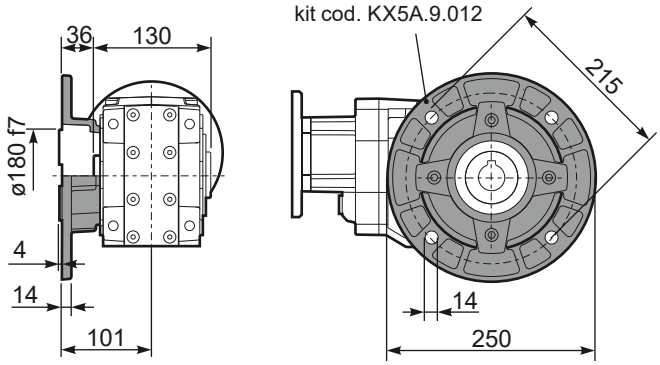

RX52A... Input shaft
Albero in entrata

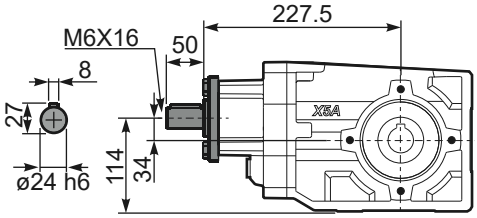

PX52A...BR.. Reaction Arm
Braccio di reazione

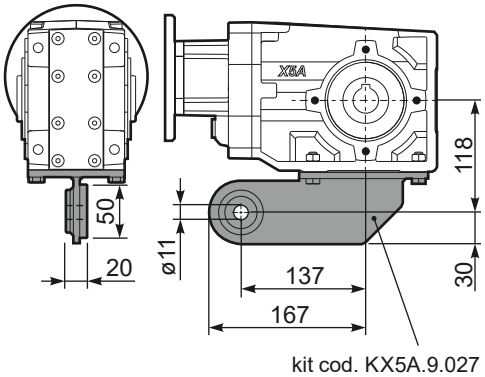

PX52AA.. Single output shaft
Albero semplice in uscita

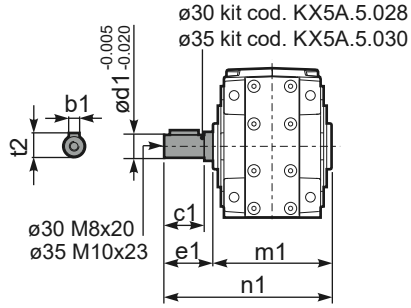

	b1	c1	d1	e1	m1	n1	t2
ø30	8	60	30	68	134	202	33
ø35	10	60	35	73.5	141	214.5	38

9