Technical Data Sheet
Gearbox
HELLICAL BEVEL

MODEL	X53A	
Ø OUTPUT SHAFT	30	mm
APPROXIMATE RATIO	179	
EXACT RATIO	178.96	
OUTPUT SPEED	8	RPM
EXACT OUTPUT SPEED	8	RPM
INPUT POWER	0.18	KW
INPUT ROTATION	1400	RPM
INPUT PAM	63B5	
OUTPUT TORQUE	206.54	N.m
NOMINAL TORQUE	250.00	N.m
NOMINAL POWER	0.22	KW
SERVICE FACTOR	1.22	
DYNAMIC EFFICIENCY	0.94	

Oil Quantity (L)

B3/H1	B6/H4	B7/H3	B8/H2	V5/H5	V6/H6
1.3	1.55	0.85	1.45	2.1	1.25

Radial and Axial Loads

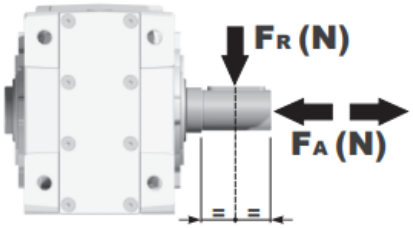

n_2 [min-1]	FA [N]	FR [N]
250	600	3000
100	800	4000
50	960	4800
15	1660	8300

Universal Motors S.A.
Rua Comendador Brandão, 484
4495-375 Póvoa de Varzim
geral@universalmotors.pt
TEL.: 252 299 080

Universal Motors UK, Ltd
Unit E2, Meltham Mills Road
West Yorkshire HD9 4AR
enquiries@universalmotors-group.co.uk
TEL.: +44(0) 1484660222

Universal Motors SL
C/La Habana n.6 nave 4 Pl Camporroso
28806 Alcala de Henares
info@universalmotors-group.es
TEL.: 918 864 213

PX53AC... Basic Gearbox
Riduttore base

Gearbox weight / peso riduttore: **12.65 kg**

M. flanges	Kit code	øF	A
63B5	K063.4.041	140	246
71B5	K063.4.042	160	244
80/90B5	K063.4.043	200	246
71B14	K063.4.047	105	244
80B14	K063.4.046	120	246
90B14	K063.4.041	140	246

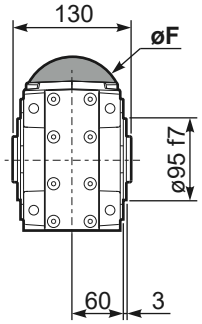

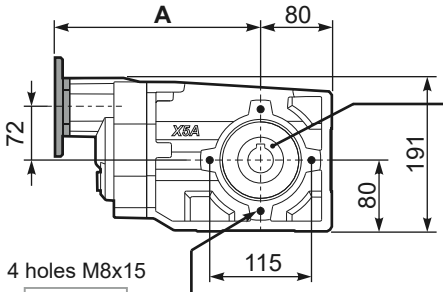

Mounting holes position
Posizione fori di montaggio

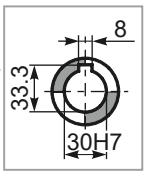

Standard
Hollow shaft

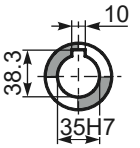

On request
A richiesta

PX53A...FB.. Feet
Piedini

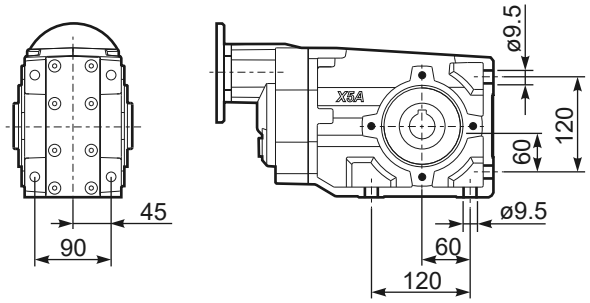

PX53A...-F2.. Output flange
Flangia uscita

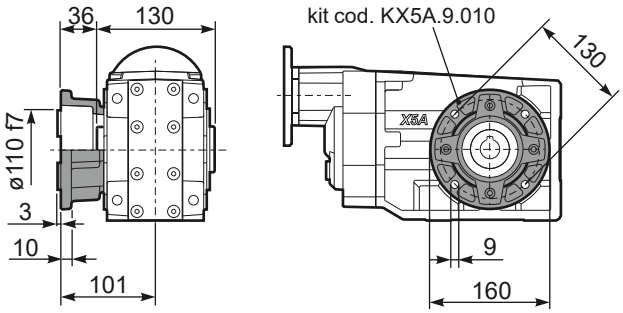

PX53A...-F3.. Output flange
Flangia uscita

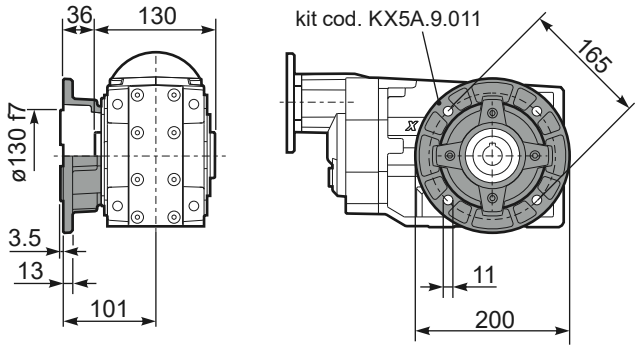

PX53A...-F4.. Output flange
Flangia uscita

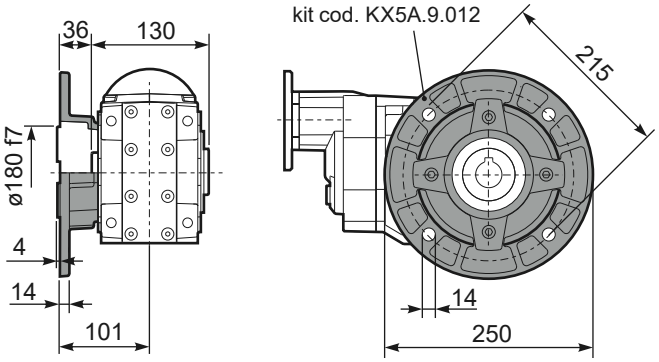

RX53A... Input shaft
Albero in entrata

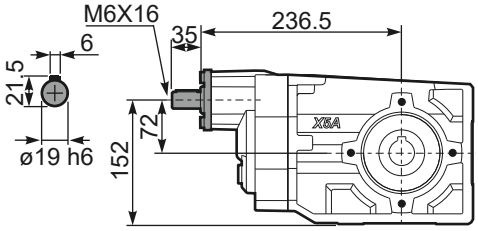

PX53A...BR.. Reaction Arm
Braccio di reazione

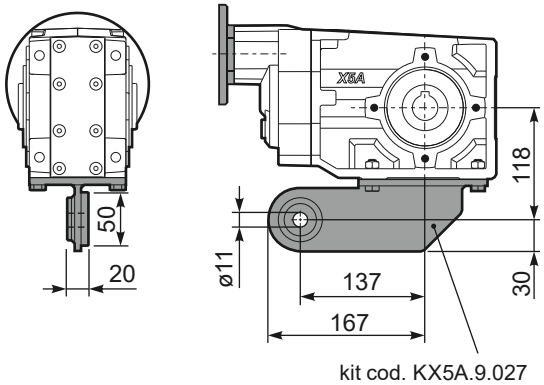

PX53AA.. Single output shaft
Albero semplice in uscita

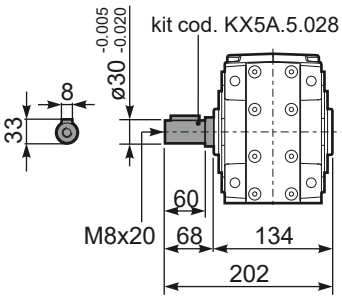

9