Technical Data Sheet
Gearbox
HELLICAL BEVEL

MODEL	X62A	
Ø OUTPUT SHAFT	35	mm
APPROXIMATE RATIO	17	
EXACT RATIO	17.46	
OUTPUT SPEED	86	RPM
EXACT OUTPUT SPEED	84	RPM
INPUT POWER	1.50	KW
INPUT ROTATION	1400	RPM
INPUT PAM	90B14	
OUTPUT TORQUE	171.49	N.m
NOMINAL TORQUE	400.00	N.m
NOMINAL POWER	3.5	KW
SERVICE FACTOR	2.33	
DYNAMIC EFFICIENCY	0.96	

Oil Quantity (L)

B3/H1	B6/H4	B7/H3	B8/H2	V5/H5	V6/H6
1.25	1.7	0.95	1.6	2.45	1.5

Radial and Axial Loads

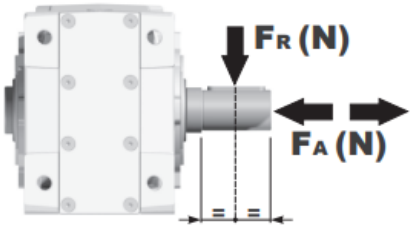

n_2 [min-1]	FA [N]	FR [N]
250	600	3000
100	780	3900
50	1140	5700
15	1660	8300

Universal Motors S.A.
Rua Comendador Brandão, 484
4495-375 Póvoa de Varzim
geral@universalmotors.pt
TEL.: 252 299 080

Universal Motors UK, Ltd
Unit E2, Meltham Mills Road
West Yorkshire HD9 4AR
enquiries@universalmotors-group.co.uk
TEL.: +44(0) 1484660222

Universal Motors SL
C/La Habana n.6 nave 4 Pl Camporroso
28806 Alcala de Henares
info@universalmotors-group.es
TEL.: 918 864 213

PX62AC... Basic Gearbox
Riduttore base

Gearbox weight peso riduttore **15.80 kg**

M. flanges	Kit code	øF	A
71B5	K023.4.041	160	253
80/90B5	K023.4.042	200	255
100/112B5	K023.4.043	250	264
132B5	KC50.4.043	300	282
80B14	K085.4.046	120	255
90B14	K085.4.045	140	255
100/112B14	K085.4.047	160	264
132B14	KC50.4.041	200	282

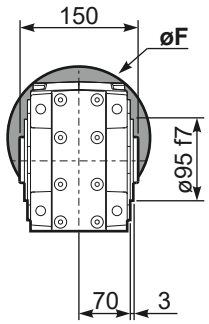

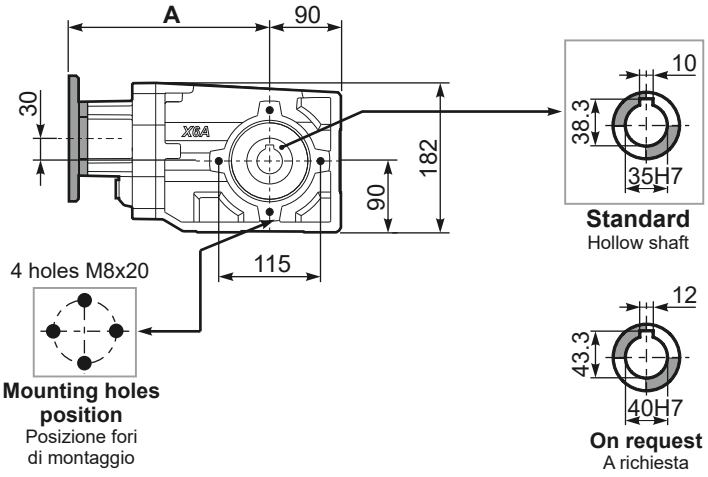

PX62A...**FB**.. Feet
Piedini

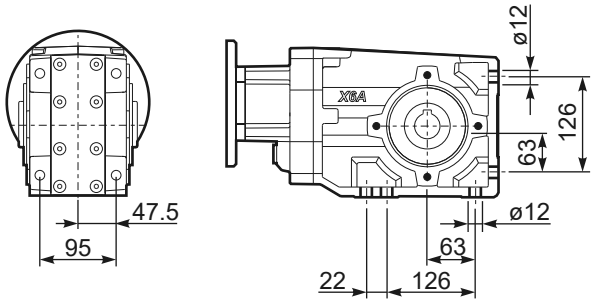

PX62A...**-F2**.. Output flange
Flangia uscita

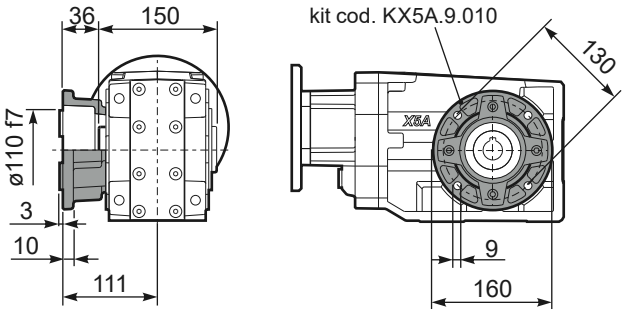

PX62A...**-F3**.. Output flange
Flangia uscita

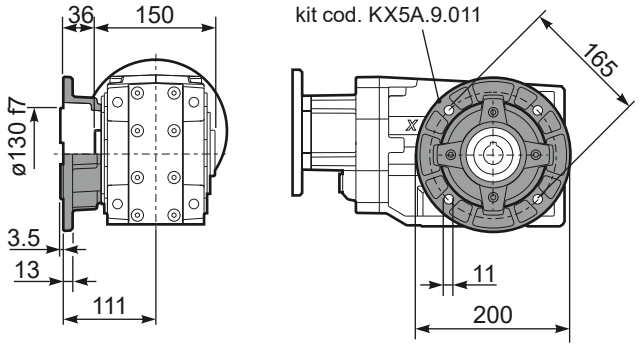

PX62A...**-F4**.. Output flange
Flangia uscita

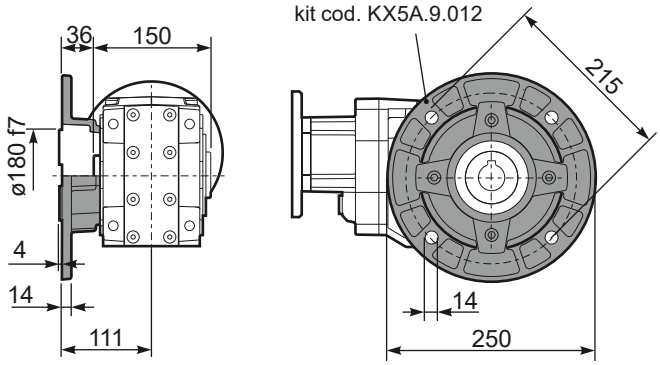

RX62A... Input shaft
Albero in entrata

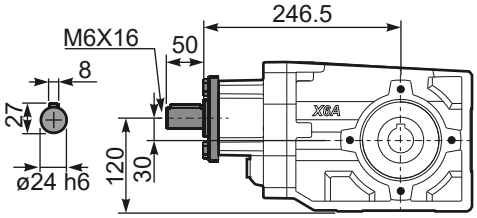

PX62A...**BR**.. Reaction Arm
Braccio di reazione

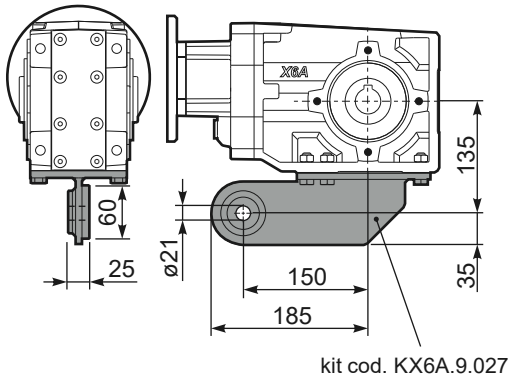

PX62A**A**.. Single output shaft
Albero semplice in uscita

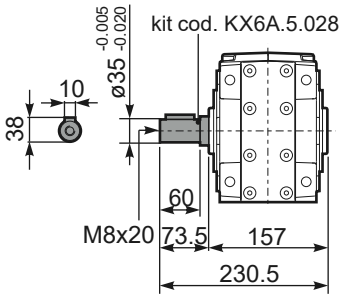

9