Technical Data Sheet
Gearbox
# HELLICAL BEVEL

| | | |
|---|---|---|
| MODEL | X63A | |
| Ø OUTPUT SHAFT | 35 | mm |
| APPROXIMATE RATIO | 116 | |
| EXACT RATIO | 116.45 | |
| OUTPUT SPEED | 13 | RPM |
| EXACT OUTPUT SPEED | 13 | RPM |
| INPUT POWER | 0.37 | KW |
| INPUT ROTATION | 1400 | RPM |
| INPUT PAM | 71B14 | |
| OUTPUT TORQUE | 276.26 | N.m |
| NOMINAL TORQUE | 410.00 | N.m |
| NOMINAL POWER | 0.55 | KW |
| SERVICE FACTOR | 1.49 | |
| DYNAMIC EFFICIENCY | 0.94 | |

## Oil Quantity (L)

| B3/H1 | B6/H4 | B7/H3 | B8/H2 | V5/H5 | V6/H6 |
|---|---|---|---|---|---|
| 1.8 | 1.8 | 1.05 | 1.7 | 2.6 | 1.65 |

## Radial and Axial Loads

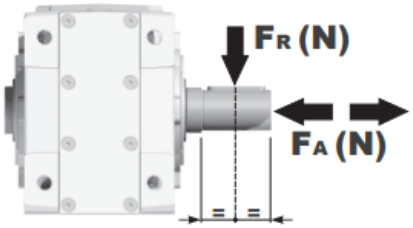


| $n_2$ [min-1] | FA [N] | FR [N] |
|---|---|---|
| 250 | 600 | 3000 |
| 100 | 780 | 3900 |
| 50 | 1140 | 5700 |
| 15 | 1660 | 8300 |

Universal Motors S.A.
Rua Comendador Brandão, 484
4495-375 Póvoa de Varzim
geral@universalmotors.pt
TEL.: 252 299 080

Universal Motors UK, Ltd
Unit E2, Meltham Mills Road
West Yorkshire HD9 4AR
enquiries@universalmotors-group.co.uk
TEL.: +44(0) 1484660222

Universal Motors SL
C/La Habana n.6 nave 4 Pl Camporroso
28806 Alcala de Henares
info@universalmotors-group.es
TEL.: 918 864 213

## **P**X63AC... Basic Gearbox
Riduttore base

**Gearbox weight** peso riduttore **15.98 kg**

| M. flanges | Kit code | øF | A |
|---|---|---|---|
| **63B5** | K063.4.041 | 140 | 265 |
| **71B5** | K063.4.042 | 160 | 263 |
| **80/90B5** | K063.4.043 | 200 | 265 |
| | | | |
| **71B14** | K063.4.047 | 105 | 263 |
| **80B14** | K063.4.046 | 120 | 265 |
| **90B14** | K063.4.041 | 140 | 265 |

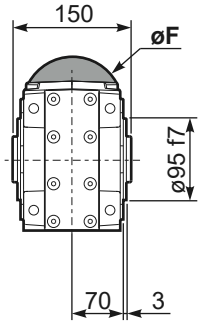


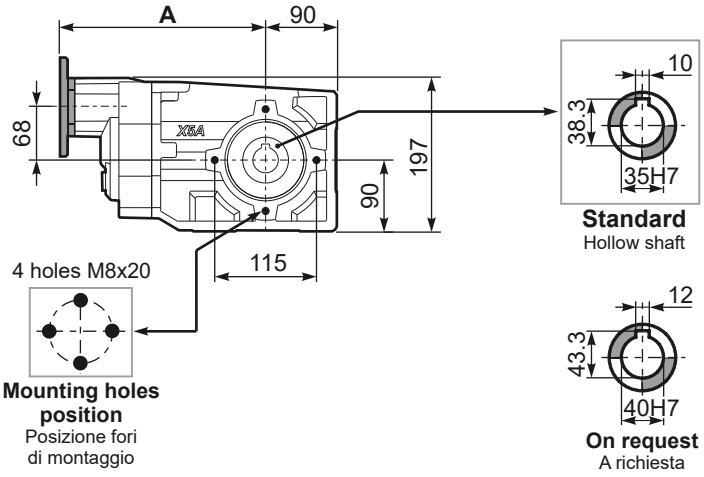


**Mounting holes position**
Posizione fori di montaggio

## PX63A...**FB**.. Feet
Piedini

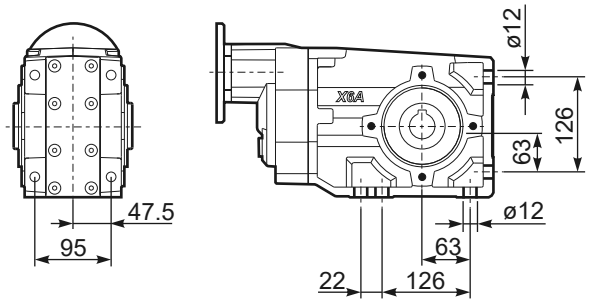


## PX63A...**-F2**.. Output flange
Flangia uscita

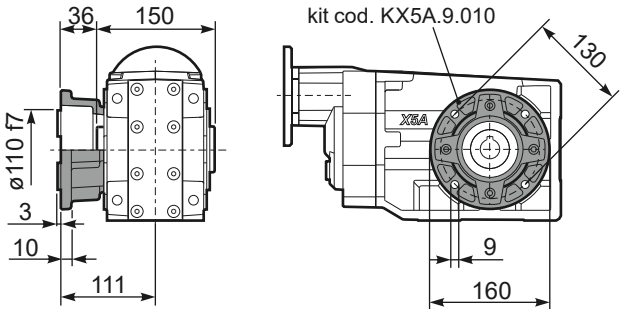


## PX63A...**-F3**.. Output flange
Flangia uscita

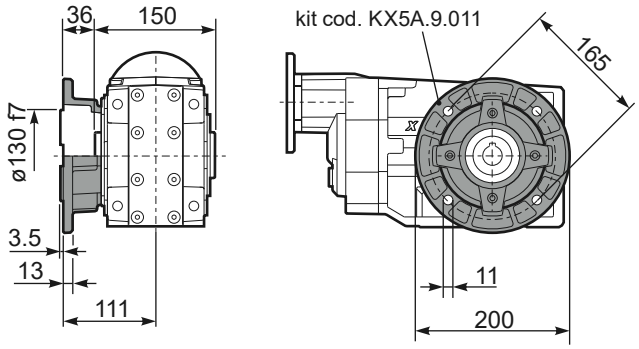


## PX63A...**-F4**.. Output flange
Flangia uscita

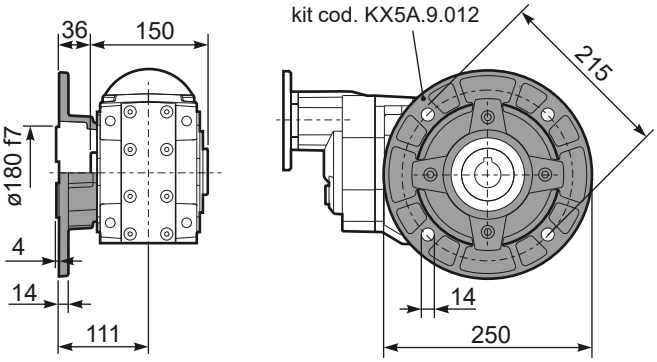


## **R**X63A... Input shaft
Albero in entrata

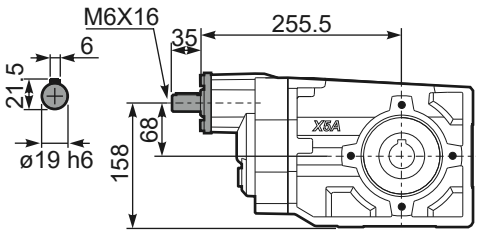


## PX63A...**BR**.. Reaction Arm
Braccio di reazione

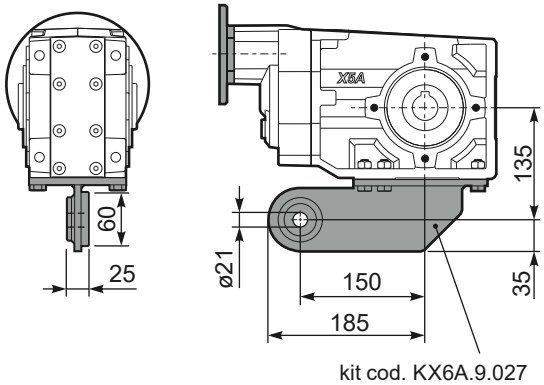


## PX63A**A**.. Single output shaft
Albero semplice in uscita

