Technical Data Sheet
Gearbox
HELLICAL BEVEL

MODEL	X63A	
Ø OUTPUT SHAFT	35	mm
APPROXIMATE RATIO	163	
EXACT RATIO	163.16	
OUTPUT SPEED	9	RPM
EXACT OUTPUT SPEED	9	RPM
INPUT POWER	0.37	KW
INPUT ROTATION	1400	RPM
INPUT PAM	71B14	
OUTPUT TORQUE	387.07	N.m
NOMINAL TORQUE	410.00	N.m
NOMINAL POWER	0.39	KW
SERVICE FACTOR	1.05	
DYNAMIC EFFICIENCY	0.94	

Oil Quantity (L)

B3/H1	B6/H4	B7/H3	B8/H2	V5/H5	V6/H6
1.8	1.8	1.05	1.7	2.6	1.65

Radial and Axial Loads

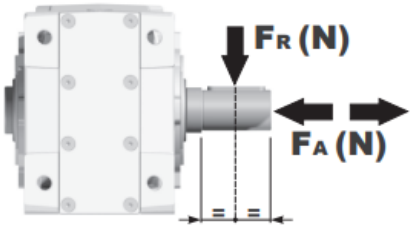

n_2 [min-1]	FA [N]	FR [N]
250	600	3000
100	780	3900
50	1140	5700
15	1660	8300

Universal Motors S.A.
Rua Comendador Brandão, 484
4495-375 Póvoa de Varzim
geral@universalmotors.pt
TEL.: 252 299 080

Universal Motors UK, Ltd
Unit E2, Meltham Mills Road
West Yorkshire HD9 4AR
enquiries@universalmotors-group.co.uk
TEL.: +44(0) 1484660222

Universal Motors SL
C/La Habana n.6 nave 4 Pl Camporroso
28806 Alcala de Henares
info@universalmotors-group.es
TEL.: 918 864 213

PX63AC... Basic Gearbox
Riduttore base

Gearbox weight peso riduttore **15.98 kg**

M. flanges	Kit code	øF	A
63B5	K063.4.041	140	265
71B5	K063.4.042	160	263
80/90B5	K063.4.043	200	265
71B14	K063.4.047	105	263
80B14	K063.4.046	120	265
90B14	K063.4.041	140	265

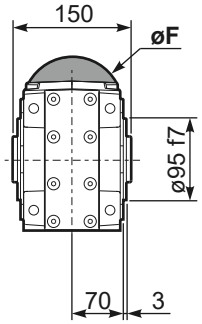

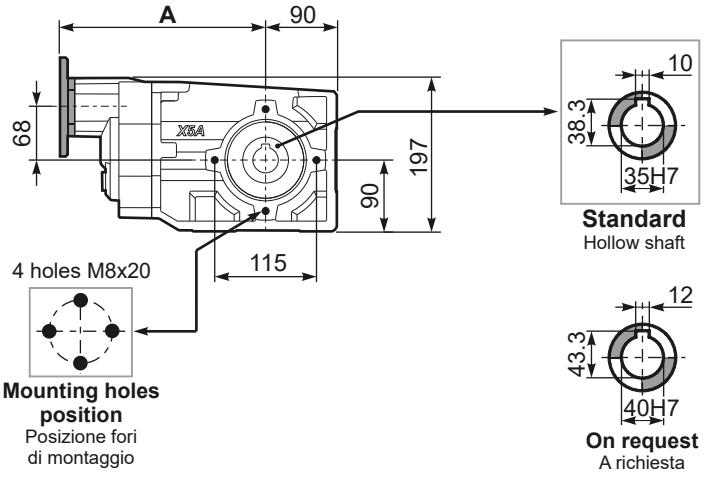

Mounting holes position
Posizione fori di montaggio

PX63A...**FB**.. Feet
Piedini

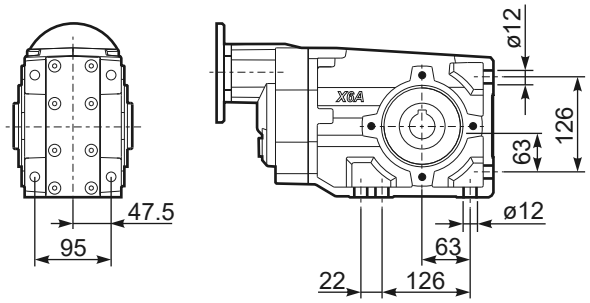

PX63A...**-F2**.. Output flange
Flangia uscita

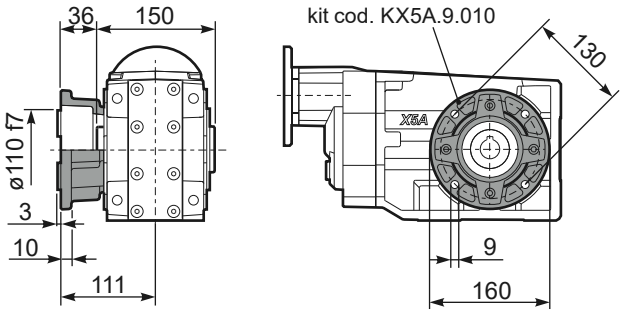

PX63A...**-F3**.. Output flange
Flangia uscita

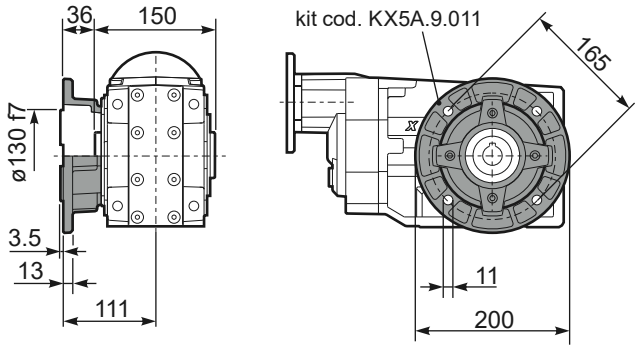

PX63A...**-F4**.. Output flange
Flangia uscita

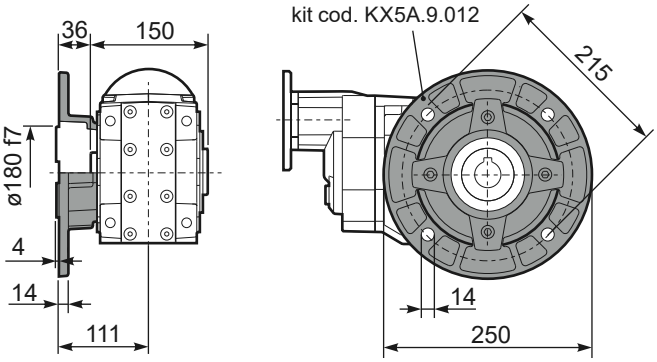

RX63A... Input shaft
Albero in entrata

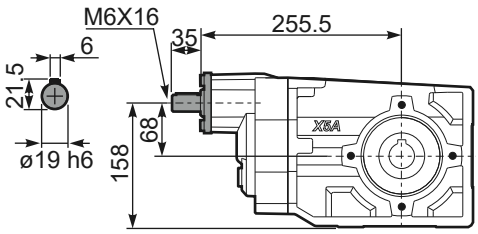

PX63A...**BR**.. Reaction Arm
Braccio di reazione

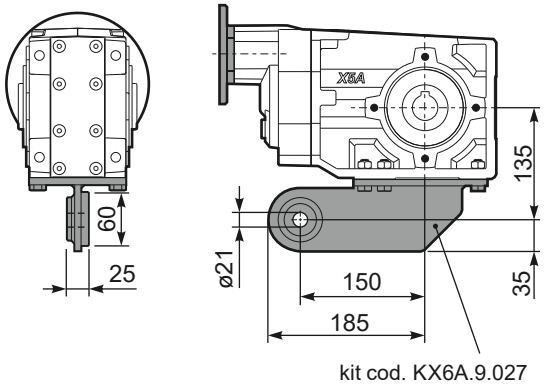

PX63A**A**.. Single output shaft
Albero semplice in uscita

