Technical Data Sheet
Gearbox
SHAFT MOUNTED

MODEL	FA42	
Ø OUTPUT SHAFT	30	mm
APPROXIMATE RATIO	12	
EXACT RATIO	12.33	
OUTPUT SPEED	122	RPM
EXACT OUTPUT SPEED	118	RPM
INPUT POWER	1.10	KW
INPUT ROTATION	1400	RPM
INPUT PAM	90B14	
OUTPUT TORQUE	88.81	N.m
NOMINAL TORQUE	260.00	N.m
NOMINAL POWER	3.2	KW
SERVICE FACTOR	2.91	
DYNAMIC EFFICIENCY	0.96	



Oil Quantity (L)

B3/H1	B6/H4	B7/H3	B8/H2	V5/H5	V6/H6
1.15	0.7	0.7	0.7	1.2	0.8

Radial and Axial Loads

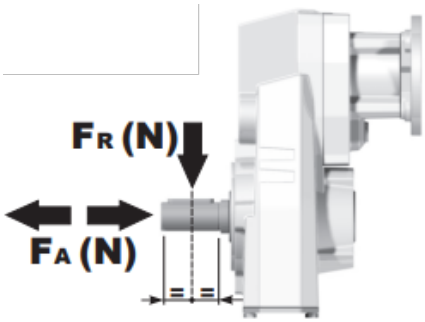

n_2 [min-1]	FA [N]	FR [N]
300	300	1500
200	350	1750
120	410	2050
15	800	4000

Universal Motors S.A.
Rua Comendador Brandão, 484
4495-375 Póvoa de Varzim
geral@universalmotors.pt
TEL.: 252 299 080

Universal Motors UK, Ltd
Unit E2, Meltham Mills Road
West Yorkshire HD9 4AR
enquiries@universalmotors-group.co.uk
TEL.: +44(0) 1484660222

Universal Motors SL
C/La Habana n.6 nave 4 Pl Camporroso
28806 Alcala de Henares
info@universalmotors-group.es
TEL.: 918 864 213

PFA42C... Basic gearbox
Riduttore base

Gearbox weight / peso riduttore: 9.0 kg

M. flanges	Kit code	øF	A
63B5	K063.4.041	140	169.5
71B5	K063.4.042	160	167.5
80/90B5	K063.4.043	200	169.5
100/112B5	KC40.4.043	250	184.5
71B14	K063.4.047	105	167.5
80B14	K063.4.046	120	169.5
90B14	K063.4.041	140	169.5
100/112B14	KC40.4.041	160	184.5

● Available torque arms, see our web site
Bracci di reazione disponibili, consulta il nostro sito web

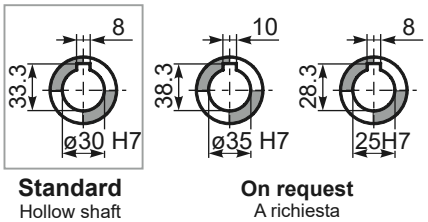

Standard
Hollow shaft

On request
A richiesta

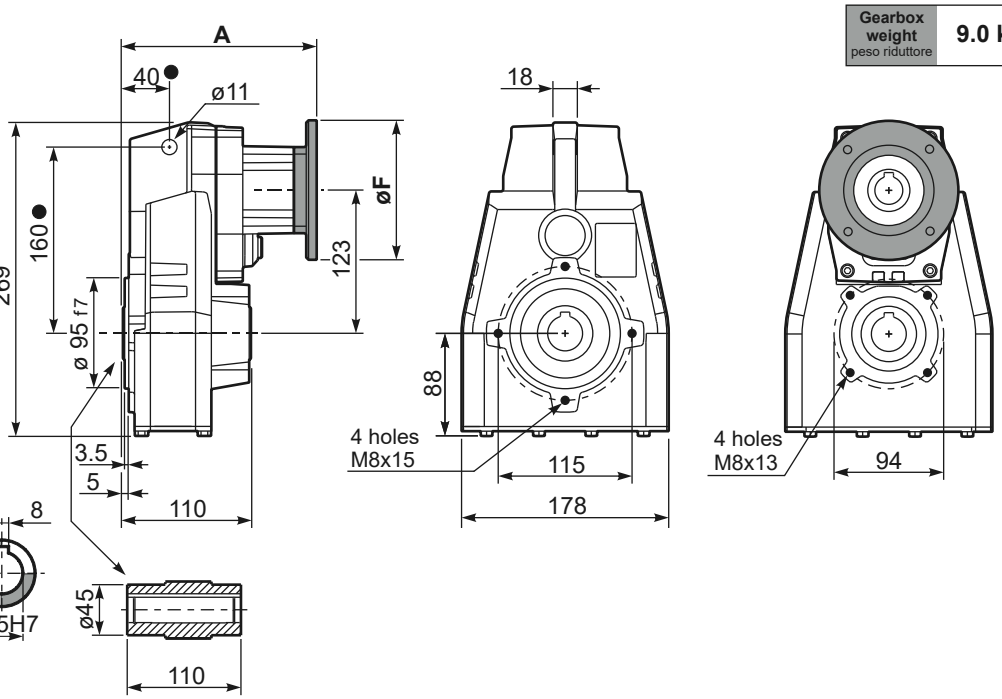

PFA42...-F... Output flange
Flangia uscita

Motor Flange	k1
63B5	205.5
71B5	203.5
80/90B5	205.5
100/112B5	220.5
71B14	203.5
80B14	205.5
90B14	205.5
100/112B14	220.5

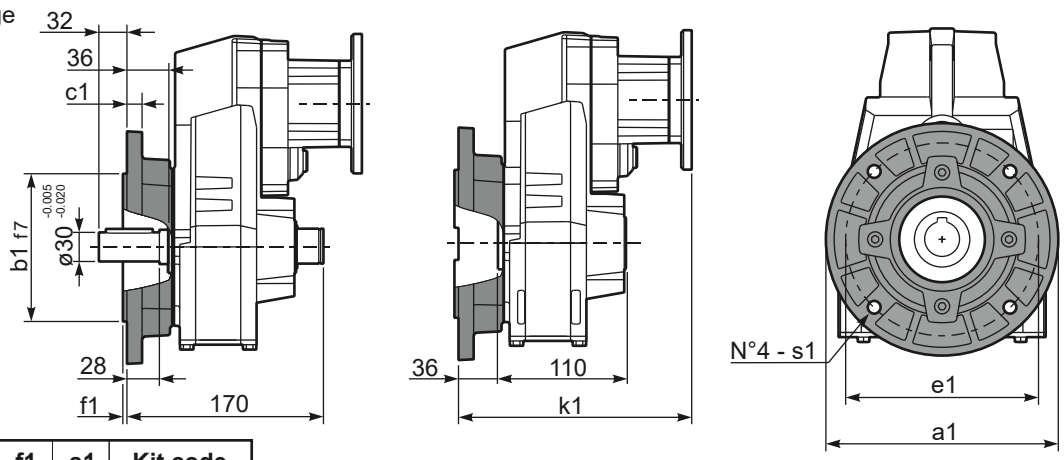

Available output flanges
Flange di uscita

a1 ø	b1	c1	e1	f1	s1	Kit code
160	110	10	130	3	9	KX5A.9.010
200	130	13	165	3.5	11	KX5A.9.011
250	180	14	215	4	14	KX5A.9.012

RFA42C... Input Shaft
Albero in entrata

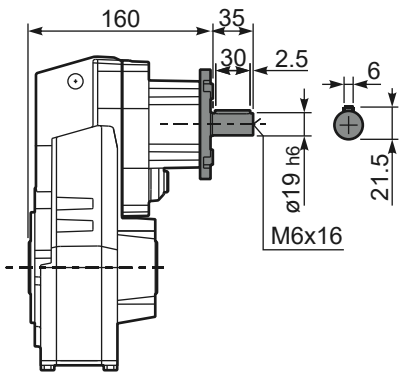

PFA42 A... Single output shaft
Albero uscita semplice

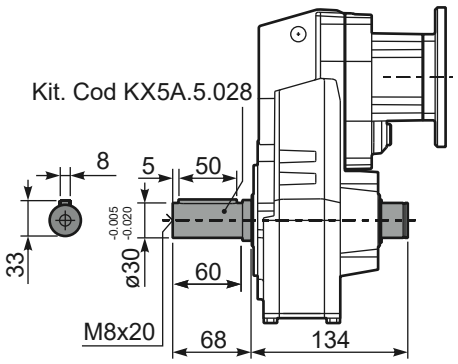

PFA42D... Shrink disk
Calettatore

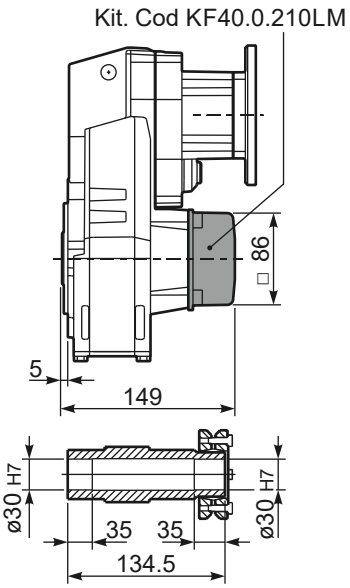

7