Technical Data Sheet
Gearbox
SHAFT MOUNTED

| | | |
|---|---|---|
| MODEL | FA42 | |
| Ø OUTPUT SHAFT | 30 | mm |
| APPROXIMATE RATIO | 26 | |
| EXACT RATIO | 25.85 | |
| OUTPUT SPEED | 56 | RPM |
| EXACT OUTPUT SPEED | 56 | RPM |
| INPUT POWER | 1.10 | KW |
| INPUT ROTATION | 1400 | RPM |
| INPUT PAM | 90B5 | |
| OUTPUT TORQUE | 186.19 | N.m |
| NOMINAL TORQUE | 320.00 | N.m |
| NOMINAL POWER | 1.9 | KW |
| SERVICE FACTOR | 1.73 | |
| DYNAMIC EFFICIENCY | 0.96 | |



## Oil Quantity (L)

| B3/H1 | B6/H4 | B7/H3 | B8/H2 | V5/H5 | V6/H6 |
|---|---|---|---|---|---|
| 1.15 | 0.7 | 0.7 | 0.7 | 1.2 | 0.8 |

## Radial and Axial Loads

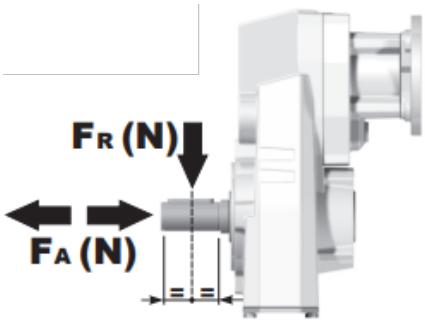


| $n_2$ [min-1] | FA [N] | FR [N] |
|---|---|---|
| 300 | 300 | 1500 |
| 200 | 350 | 1750 |
| 120 | 410 | 2050 |
| 15 | 800 | 4000 |

Universal Motors S.A.
Rua Comendador Brandão, 484
4495-375 Póvoa de Varzim
geral@universalmotors.pt
TEL.: 252 299 080

Universal Motors UK, Ltd
Unit E2, Meltham Mills Road
West Yorkshire HD9 4AR
enquiries@universalmotors-group.co.uk
TEL.: +44(0) 1484660222

Universal Motors SL
C/La Habana n.6 nave 4 Pl Camporroso
28806 Alcala de Henares
info@universalmotors-group.es
TEL.: 918 864 213

## PFA42C... Basic gearbox
Riduttore base

Gearbox weight / peso riduttore: 9.0 kg

| M. flanges | Kit code | øF | A |
|---|---|---|---|
| **63B5** | K063.4.041 | 140 | 169.5 |
| **71B5** | K063.4.042 | 160 | 167.5 |
| **80/90B5** | K063.4.043 | 200 | 169.5 |
| **100/112B5** | KC40.4.043 | 250 | 184.5 |
| | | | |
| **71B14** | K063.4.047 | 105 | 167.5 |
| **80B14** | K063.4.046 | 120 | 169.5 |
| **90B14** | K063.4.041 | 140 | 169.5 |
| **100/112B14** | KC40.4.041 | 160 | 184.5 |

● Available torque arms, see our web site
Bracci di reazione disponibili, consulta il nostro sito web

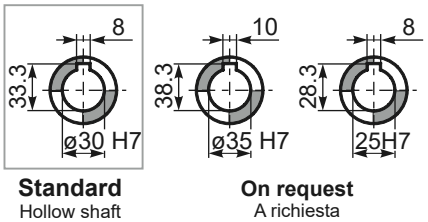


**Standard**
Hollow shaft

**On request**
A richiesta

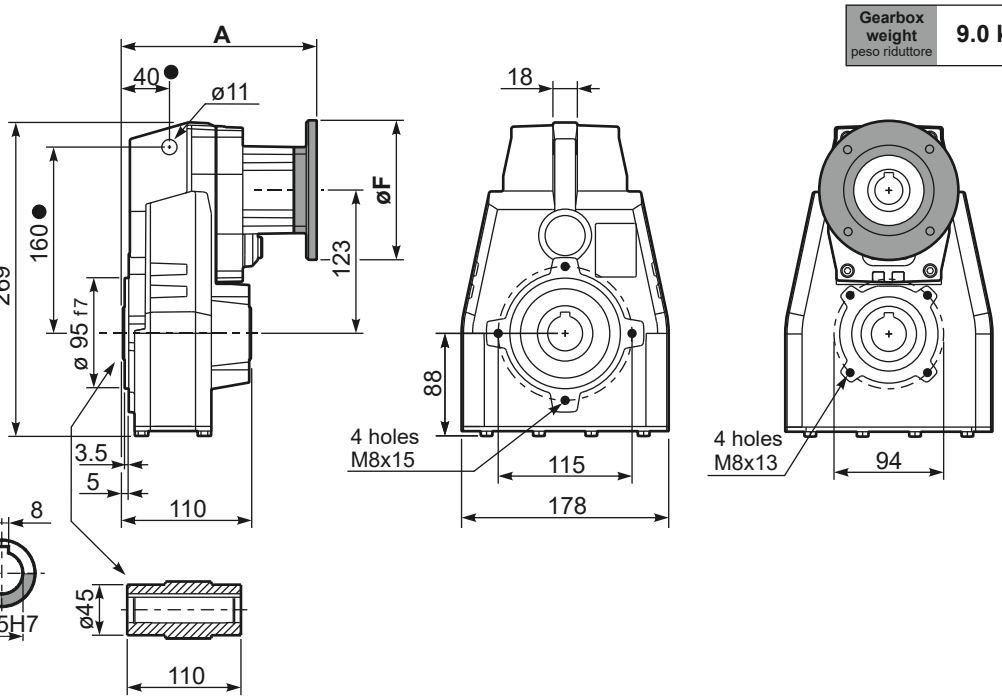


## PFA42...-F... Output flange
Flangia uscita

| Motor Flange | k1 |
|---|---|
| 63B5 | 205.5 |
| 71B5 | 203.5 |
| 80/90B5 | 205.5 |
| 100/112B5 | 220.5 |
| | |
| 71B14 | 203.5 |
| 80B14 | 205.5 |
| 90B14 | 205.5 |
| 100/112B14 | 220.5 |

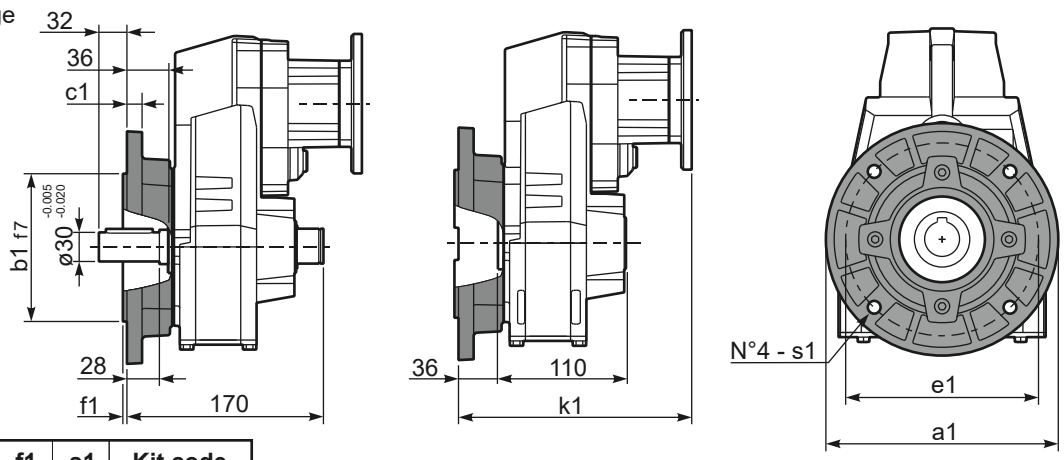


**Available output flanges**
Flange di uscita

| a1 ø | b1 | c1 | e1 | f1 | s1 | Kit code |
|---|---|---|---|---|---|---|
| 160 | 110 | 10 | 130 | 3 | 9 | KX5A.9.010 |
| 200 | 130 | 13 | 165 | 3.5 | 11 | KX5A.9.011 |
| 250 | 180 | 14 | 215 | 4 | 14 | KX5A.9.012 |

## RFA42C... Input Shaft
Albero in entrata

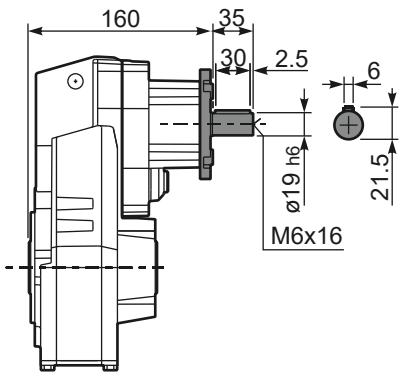


## PFA42 A... Single output shaft
Albero uscita semplice

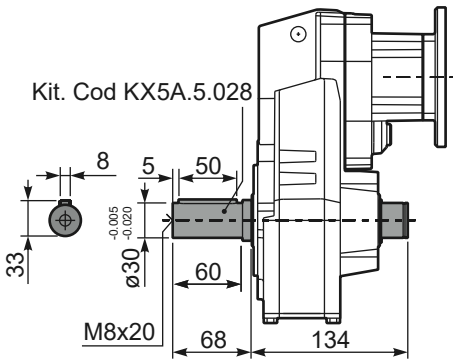


## PFA42D... Shrink disk
Calettatore

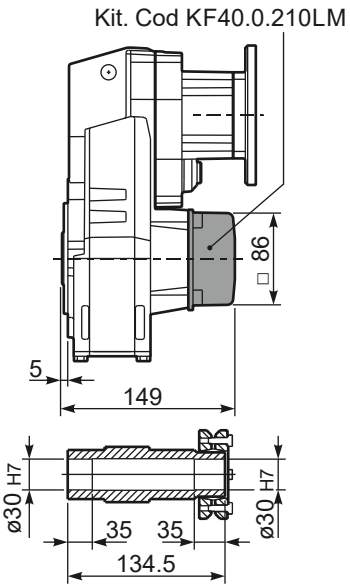


7