Technical Data Sheet
Gearbox
SHAFT MOUNTED

MODEL	FA43	
Ø OUTPUT SHAFT	30	mm
APPROXIMATE RATIO	214	
EXACT RATIO	214.15	
OUTPUT SPEED	7	RPM
EXACT OUTPUT SPEED	7	RPM
INPUT POWER	0.18	KW
INPUT ROTATION	1400	RPM
INPUT PAM	63B14	
OUTPUT TORQUE	247.15	N.m
NOMINAL TORQUE	320.00	N.m
NOMINAL POWER	0.23	KW
SERVICE FACTOR	1.28	
DYNAMIC EFFICIENCY	0.94	



Oil Quantity (L)

B3/H1	B6/H4	B7/H3	B8/H2	V5/H5	V6/H6
1.65	0.7	0.7	0.7	1.35	0.9

Radial and Axial Loads

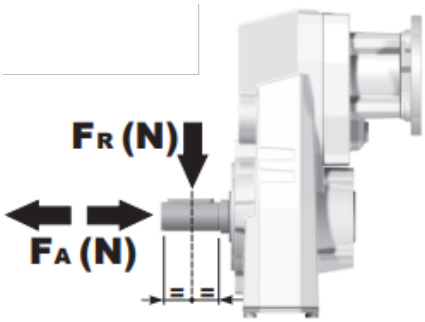

n_2 [min-1]	FA [N]	FR [N]
300	300	1500
200	350	1750
120	410	2050
15	800	4000

Universal Motors S.A.
Rua Comendador Brandão, 484
4495-375 Póvoa de Varzim
geral@universalmotors.pt
TEL.: 252 299 080

Universal Motors UK, Ltd
Unit E2, Meltham Mills Road
West Yorkshire HD9 4AR
enquiries@universalmotors-group.co.uk
TEL.: +44(0) 1484660222

Universal Motors SL
C/La Habana n.6 nave 4 Pl Camporroso
28806 Alcala de Henares
info@universalmotors-group.es
TEL.: 918 864 213

PFA43C... Basic gearbox
Riduttore base

Gearbox weight peso riduttore **8.9 kg**

M. flanges	Kit code	øF	A
63B5	K050.4.041	138	175
71B5	K050.4.042	160	172.5
56B14	KC40.4.049	80	172.5
63B14	K050.4.047	90	175
71B14	K050.4.045	105	172.5

● Available torque arms, see our web site
Bracci di reazione disponibili, consulta il nostro sito web

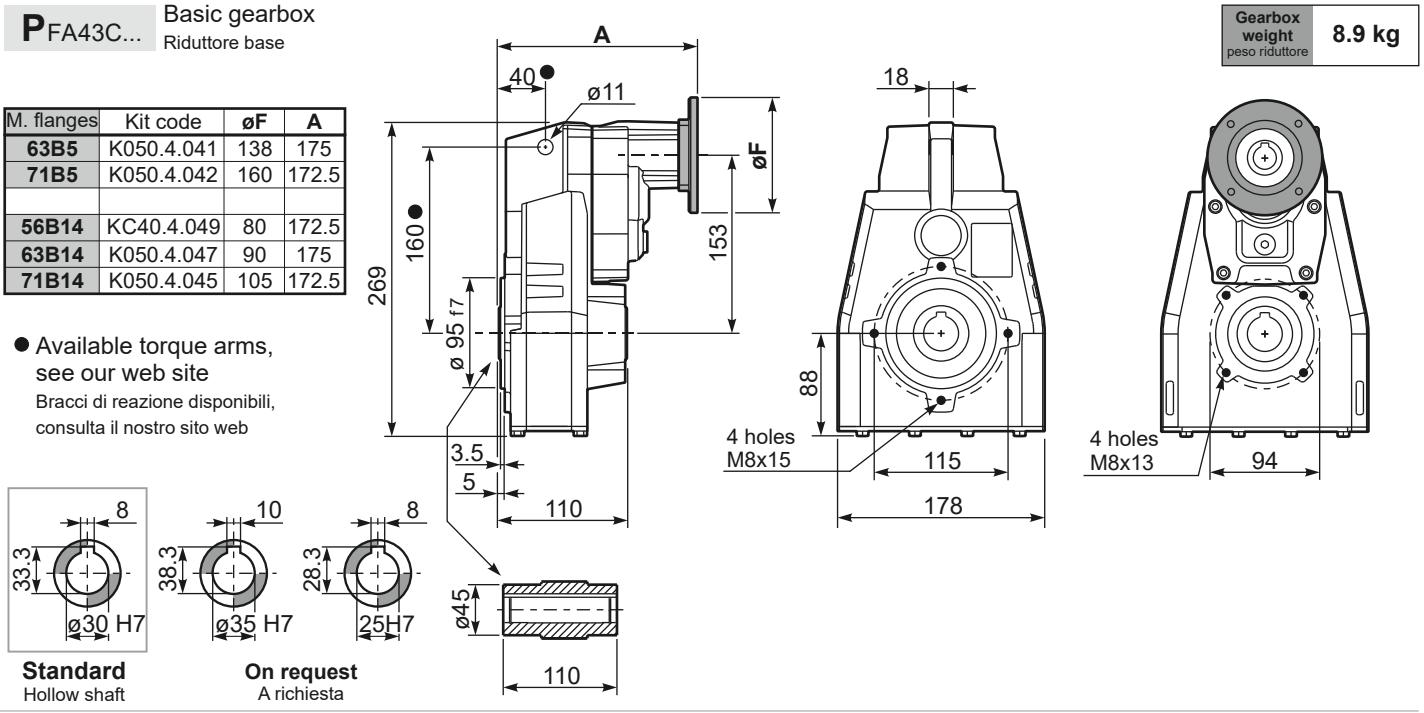

Standard
Hollow shaft

On request
A richiesta

PFA43...-F... Output flange
Flangia uscita

Motor Flange	k1
63B5	211
71B5	208.5
56B14	208.5
63B14	211
71B14	208.5

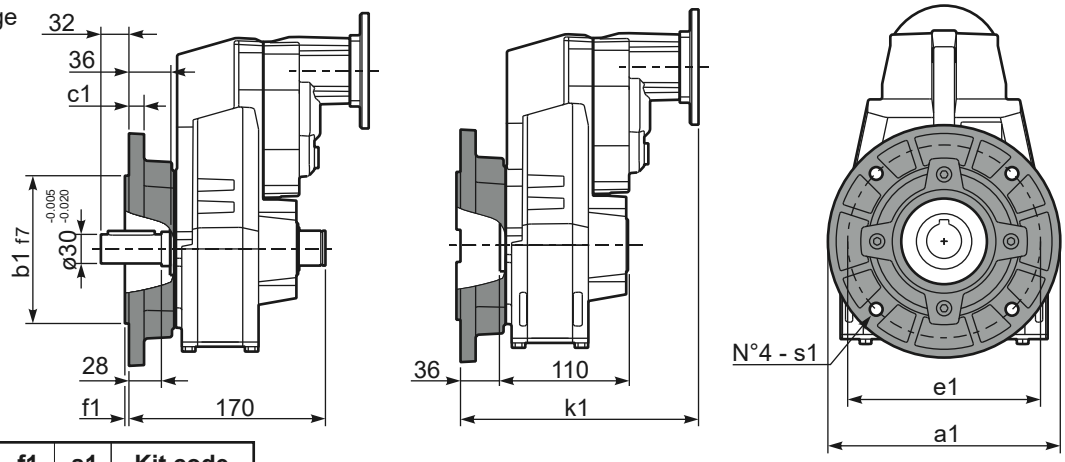

Available output flanges
Flange di uscita

a1 ø	b1	c1	e1	f1	s1	Kit code
160	110	10	130	3	9	KX5A.9.010
200	130	13	165	3.5	11	KX5A.9.011
250	180	14	215	4	14	KX5A.9.012

RFA43C... Input Shaft
Albero in entrata

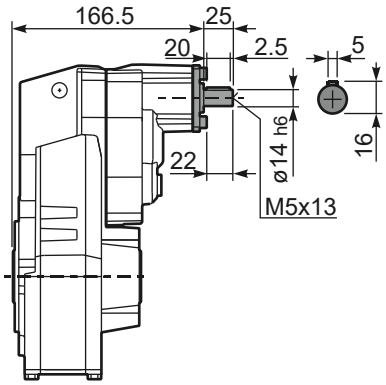

PFA43 A... Single output shaft
Albero uscita semplice

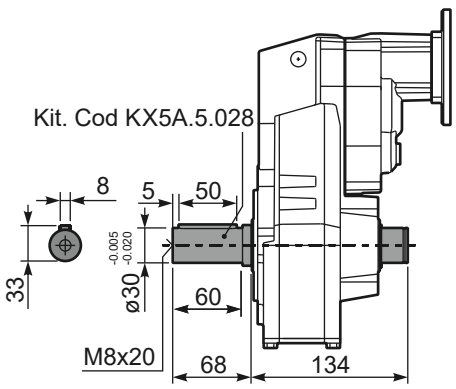

PFA43D... Shrink disk
Calettatore

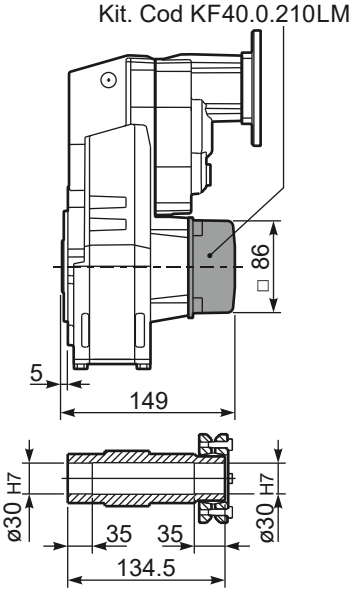

7