Technical Data Sheet
Gearbox
SHAFT MOUNTED

MODEL	FA53	
Ø OUTPUT SHAFT	35	mm
APPROXIMATE RATIO	135	
EXACT RATIO	134.91	
OUTPUT SPEED	11	RPM
EXACT OUTPUT SPEED	11	RPM
INPUT POWER	0.37	KW
INPUT ROTATION	1400	RPM
INPUT PAM	71B5	
OUTPUT TORQUE	320.05	N.m
NOMINAL TORQUE	510.00	N.m
NOMINAL POWER	0.59	KW
SERVICE FACTOR	1.59	
DYNAMIC EFFICIENCY	0.94	



Oil Quantity (L)

B3/H1	B6/H4	B7/H3	B8/H2	V5/H5	V6/H6
2.15	1.25	1.25	1.45	2.35	1.45

Radial and Axial Loads

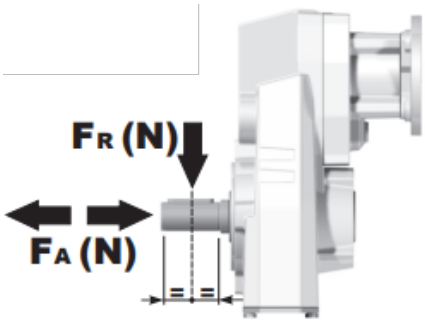

n_2 [min-1]	FA [N]	FR [N]
300	400	2000
200	440	2200
120	500	2500
15	1140	5700

Universal Motors S.A.
Rua Comendador Brandão, 484
4495-375 Póvoa de Varzim
geral@universalmotors.pt
TEL.: 252 299 080

Universal Motors UK, Ltd
Unit E2, Meltham Mills Road
West Yorkshire HD9 4AR
enquiries@universalmotors-group.co.uk
TEL.: +44(0) 1484660222

Universal Motors SL
C/La Habana n.6 nave 4 Pl Camporroso
28806 Alcala de Henares
info@universalmotors-group.es
TEL.: 918 864 213

PFA53C... Basic gearbox
Riduttore base

Gearbox weight peso riduttore **15.5 kg**

M. flanges	Kit code	øF	A
63B5	K063.4.041	140	239
71B5	K063.4.042	160	237
80/90B5	K063.4.043	200	239
71B14	K063.4.047	105	237
80B14	K063.4.046	120	239
90B14	K063.4.041	140	239

● Available torque arms, see our web site
Bracci di reazione disponibili, consulta il nostro sito web

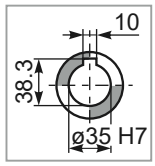

Standard
Hollow shaft

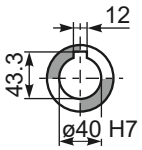

On request
A richiesta

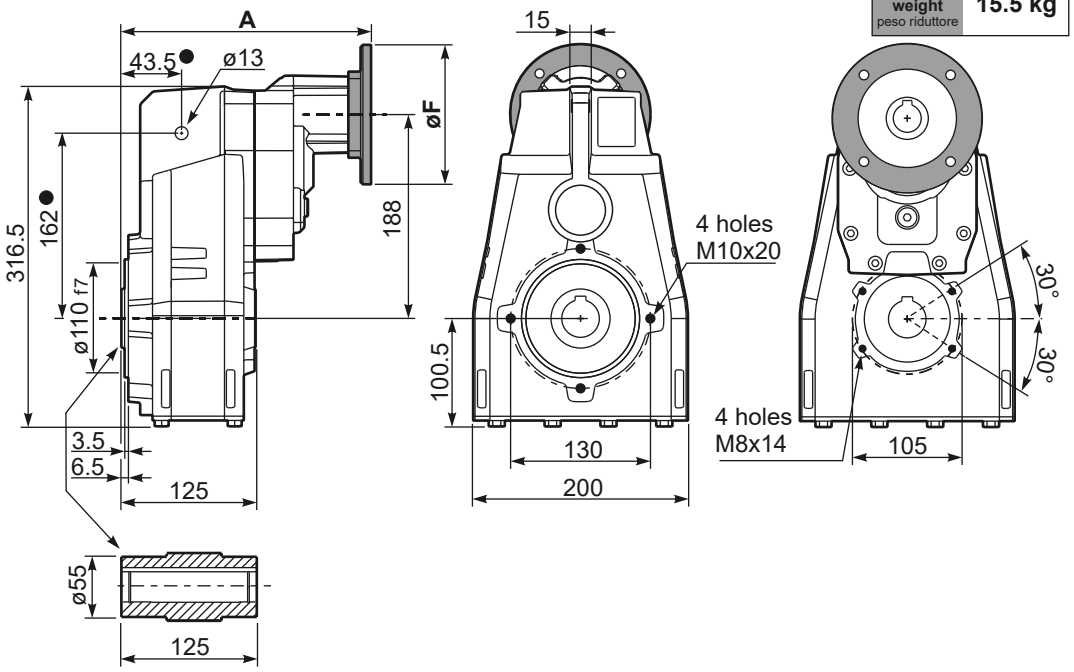

PFA53...-F... Output flange
Flangia uscita

Motor Flange	k1
63B5	272
71B5	270
80/90B5	272
71B14	270
80B14	272
90B14	272

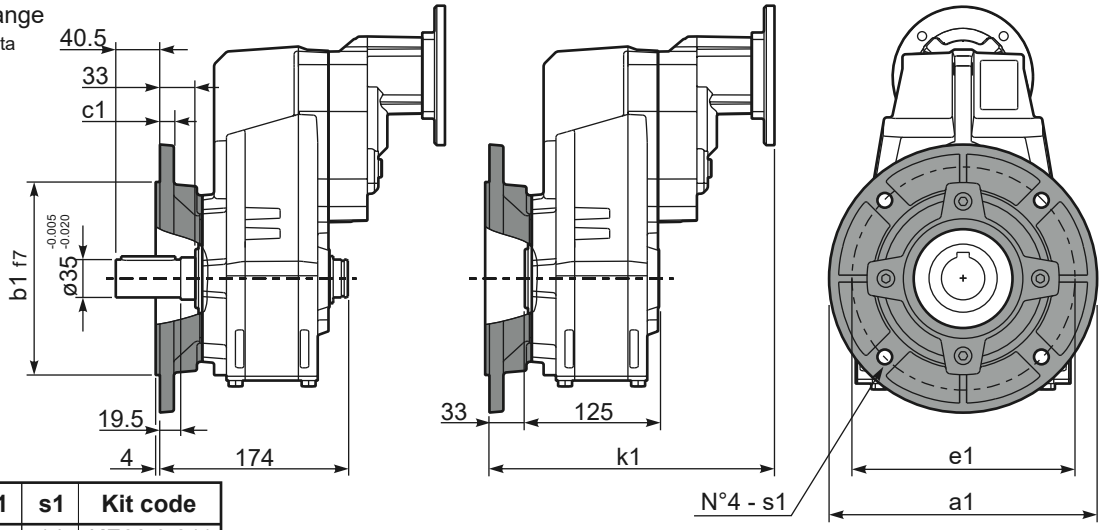

Available output flanges
Flange di uscita

a1 ø	b1	c1	e1	s1	Kit code
250	180	13	215	14	KF60.9.011
-	-	-	-	-	-

RFA53C... Input Shaft
Albero in entrata

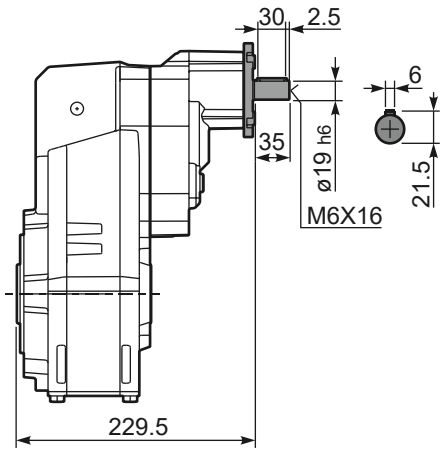

PFA53A... Single output shaft
Albero uscita semplice

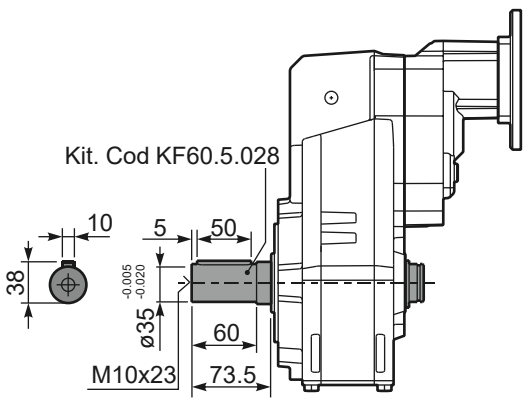

PFA53D... Shrink disk
Calettatore

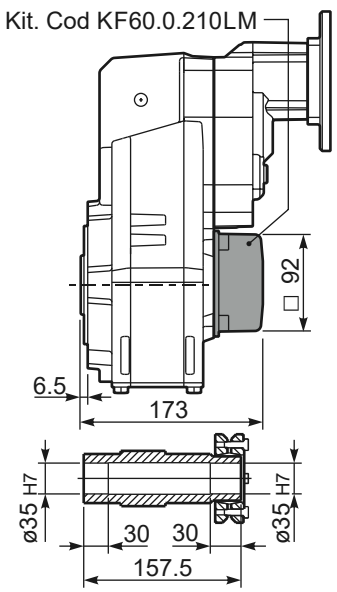

7