Technical Data Sheet
Inverter UMA1 4.0kW 3 phase Input 3 phase Output

## Technical Data

### Power 4.0kW

| | | |
|---|---|---|
| SUPPLY | AC 3PH 380-440V | |
| INPUT CURRENT G* | 13.5 | A |
| INPUT CURRENT P | 19.5 | A |
| OUTPUT VOLTAGE | 3PH 0~Vin | V |
| OUTPUT CURRENT G | 9.5 | A |
| OUTPUT CURRENT P | 14 | A |
| IP | 20 | |
| EMC FILTER C3 | built-in | |
| EMC FILTER C2 | optional | |
| BRAKING UNIT | built-in | |



*G represents the constant torque and P represents the variable torque

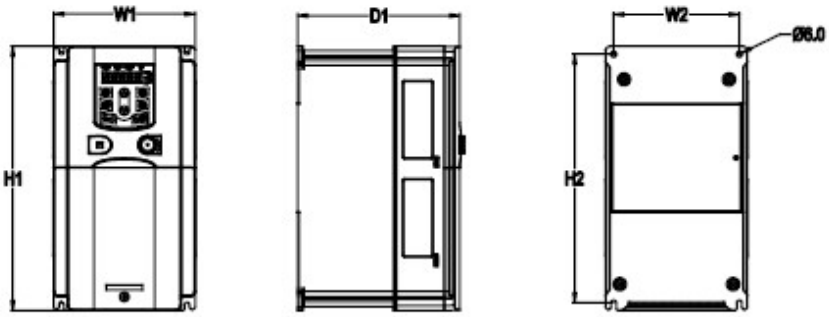


## Installation dimensions

| | |
|---|---|
| H1 | 256 mm |
| H2 | 243.5 mm |
| H3 | - mm |
| W1 | 146 mm |
| W2 | 131 mm |
| W3 | - mm |
| W4 | - mm |
| D1 | 181 mm |
| D2 | - mm |
| Hole diameter | 6 mm |
| Screw | M5 |


Universal Motors S.A.
Rua Comendador Brandão, 484
4495-375 Póvoa de Varzim
geral@universalmotors.pt
TEL.: 252 299 080

Universal Motors UK, Ltd
Unit E2, Meltham Mills Road
West Yorkshire HD9 4AR
enquiries@universalmotors-group.co.uk
TEL.: +44(0) 1484660222

Universal Motors SL
C/La Habana n.6 nave 4 Pl Camporroso
28806 Alcala de Henares
info@universalmotors-group.es
TEL.: 918 864 213

Technical Data Sheet
Inverter UMA1 4.0kW 3 phase Input 3 phase Output

## Control Diagram

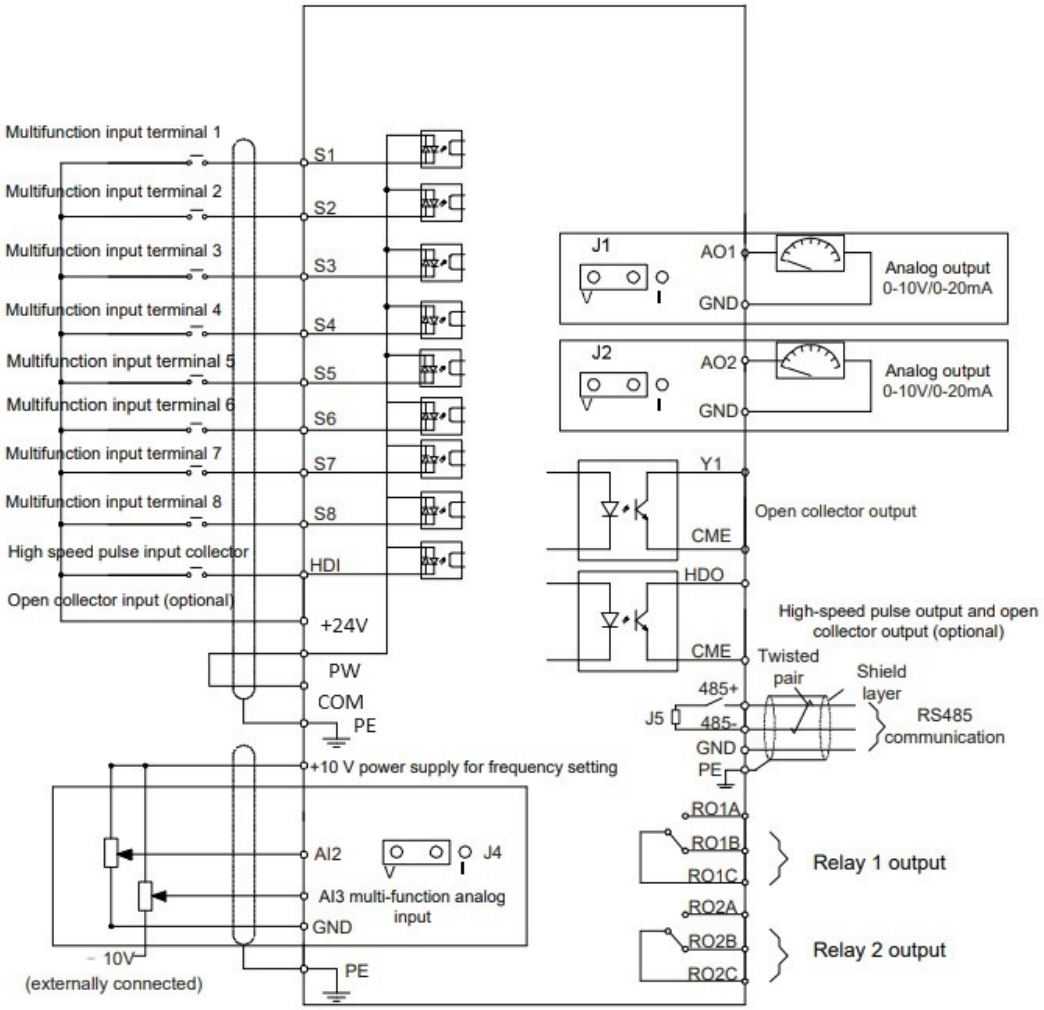


## Packaging size

| | | |
|---|---|---|
| Height | 360 | mm |
| Width | 250 | mm |
| Depth | 265 | mm |
| Weight | 4.1 | Kg |


Universal Motors S.A.
Rua Comendador Brandão, 484
4495-375 Póvoa de Varzim
geral@universalmotors.pt
TEL.: 252 299 080

Universal Motors UK, Ltd
Unit E2, Meltham Mills Road
West Yorkshire HD9 4AR
enquiries@universalmotors-group.co.uk
TEL.: +44(0) 1484660222

Universal Motors SL
C/La Habana n.6 nave 4 Pl Camporroso
28806 Alcala de Henares
info@universalmotors-group.es
TEL.: 918 864 213