Technical Data Sheet
Inverter UMP1 18.5kW 3 phase Input 3 phase Output IP20

Technical Data

Power 18.5kW

SUPPLY	AC 3PH 380-440V	
INPUT CURRENT G*	45	A
INPUT CURRENT P	51	A
OUTPUT VOLTAGE	3PH 0~Vin	V
OUTPUT CURRENT G	38	A
OUTPUT CURRENT P	45	A
IP	20	
EMC FILTER C3	built-in	
EMC FILTER C2	optional	
BRAKING UNIT	built-in	



*G represents the constant torque and P represents the variable torque

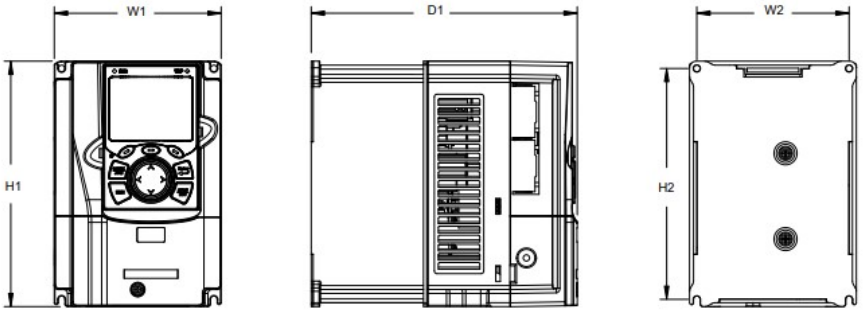

Installation dimensions

H1	340.5 mm
H2	328.6 mm
H3	- mm
W1	200 mm
W2	185 mm
W3	- mm
W4	- mm
D1	208 mm
D2	- mm
Hole diameter	6 mm
Screw	M5

Universal Motors S.A.
Rua Comendador Brandão, 484
4495-375 Póvoa de Varzim
geral@universalmotors.pt
TEL.: 252 299 080

Universal Motors UK, Ltd
Unit E2, Meltham Mills Road
West Yorkshire HD9 4AR
enquiries@universalmotors-group.co.uk
TEL.: +44(0) 1484660222

Universal Motors SL
C/La Habana n.6 nave 4 Pl Camporroso
28806 Alcala de Henares
info@universalmotors-group.es
TEL.: 918 864 213

Technical Data Sheet
Inverter UMP1 18.5kW 3 phase Input 3 phase Output
IP20

Control Diagram

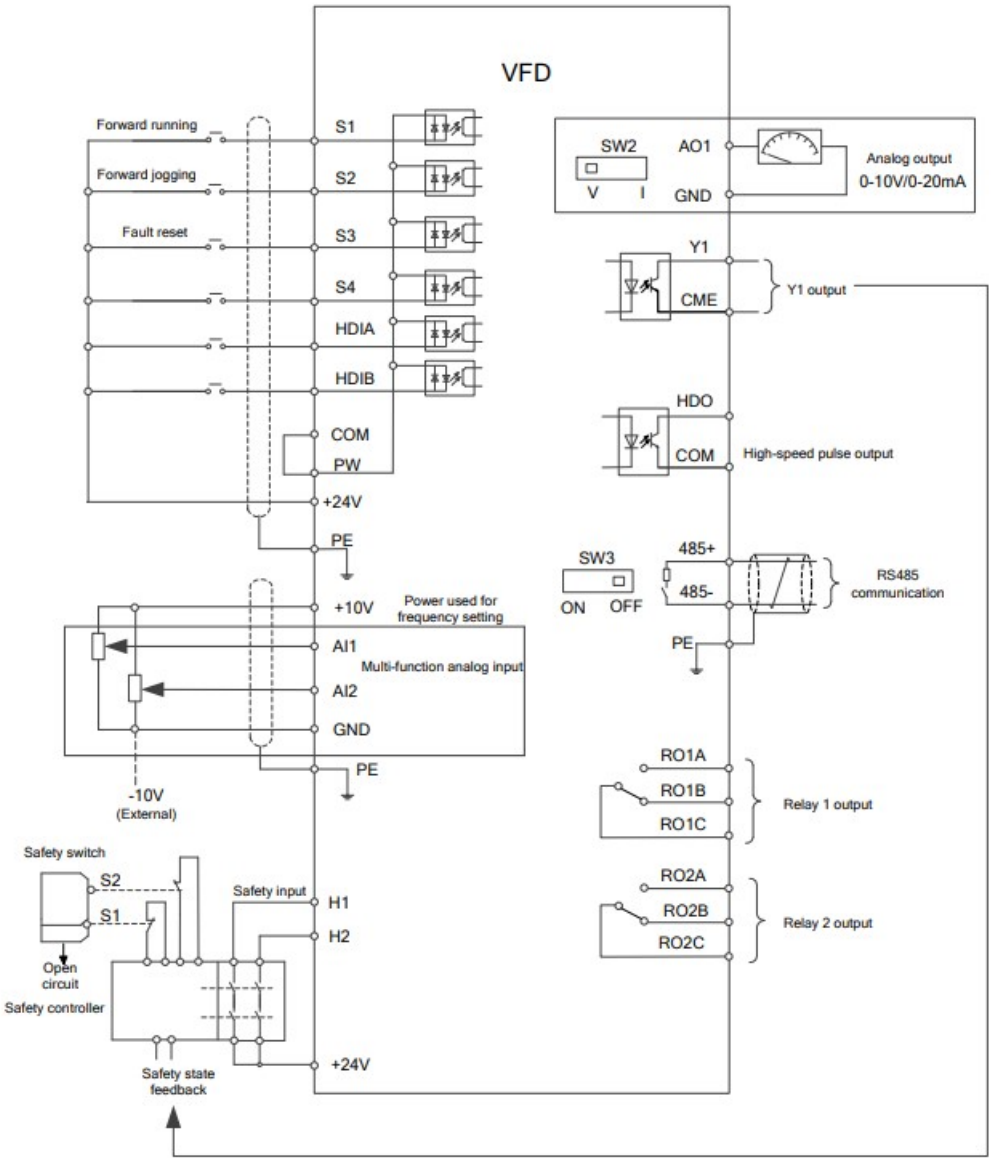

Packaging size

Height	490	mm
Width	315	mm
Depth	315	mm
Weight	10.5	Kg

Universal Motors S.A.
Rua Comendador Brandão, 484
4495-375 Póvoa de Varzim
geral@universalmotors.pt
TEL.: 252 299 080

Universal Motors UK, Ltd
Unit E2, Meltham Mills Road
West Yorkshire HD9 4AR
enquiries@universalmotors-group.co.uk
TEL.: +44(0) 1484660222

Universal Motors SL
C/La Habana n.6 nave 4 PI Camporroso
28806 Alcala de Henares
info@universalmotors-group.es
TEL.: 918 864 213