Technical Data Sheet
Inverter UMP1 110kW 3 phase Input 3 phase Output
IP20

## Technical Data

### Power 110kW

| | | |
|---|---|---|
| SUPPLY | AC 3PH 380-440V | |
| INPUT CURRENT G* | 201 | A |
| INPUT CURRENT P | 265 | A |
| OUTPUT VOLTAGE | 3PH 0~Vin | V |
| OUTPUT CURRENT G | 215 | A |
| OUTPUT CURRENT P | 260 | A |
| IP | 20 | |
| EMC FILTER C3 | built-in | |
| EMC FILTER C2 | optional | |
| BRAKING UNIT | optional | |



*G represents the constant torque and P represents the variable torque

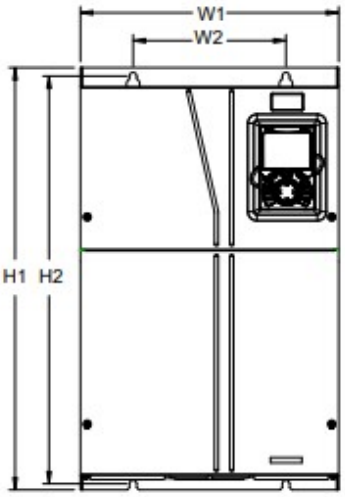


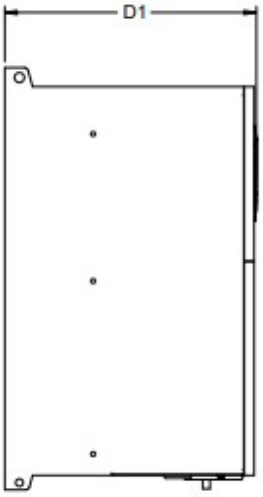


## Installation dimensions

| | |
|---|---|
| H1 | 554 mm |
| H2 | 535 mm |
| H3 | - mm |
| W1 | 338 mm |
| W2 | 200 mm |
| W3 | - mm |
| W4 | - mm |
| D1 | 330 mm |
| D2 | - mm |
| Hole diameter | 10 mm |
| Screw | M8 |

Universal Motors S.A.
Rua Comendador Brandão, 484
4495-375 Póvoa de Varzim
geral@universalmotors.pt
TEL.: 252 299 080

Universal Motors UK, Ltd
Unit E2, Meltham Mills Road
West Yorkshire HD9 4AR
enquiries@universalmotors-group.co.uk
TEL.: +44(0) 1484660222

Universal Motors SL
C/La Habana n.6 nave 4 PI Camporroso
28806 Alcala de Henares
info@universalmotors-group.es
TEL.: 918 864 213

Technical Data Sheet
Inverter UMP1 110kW 3 phase Input 3 phase Output
IP20

## Control Diagram

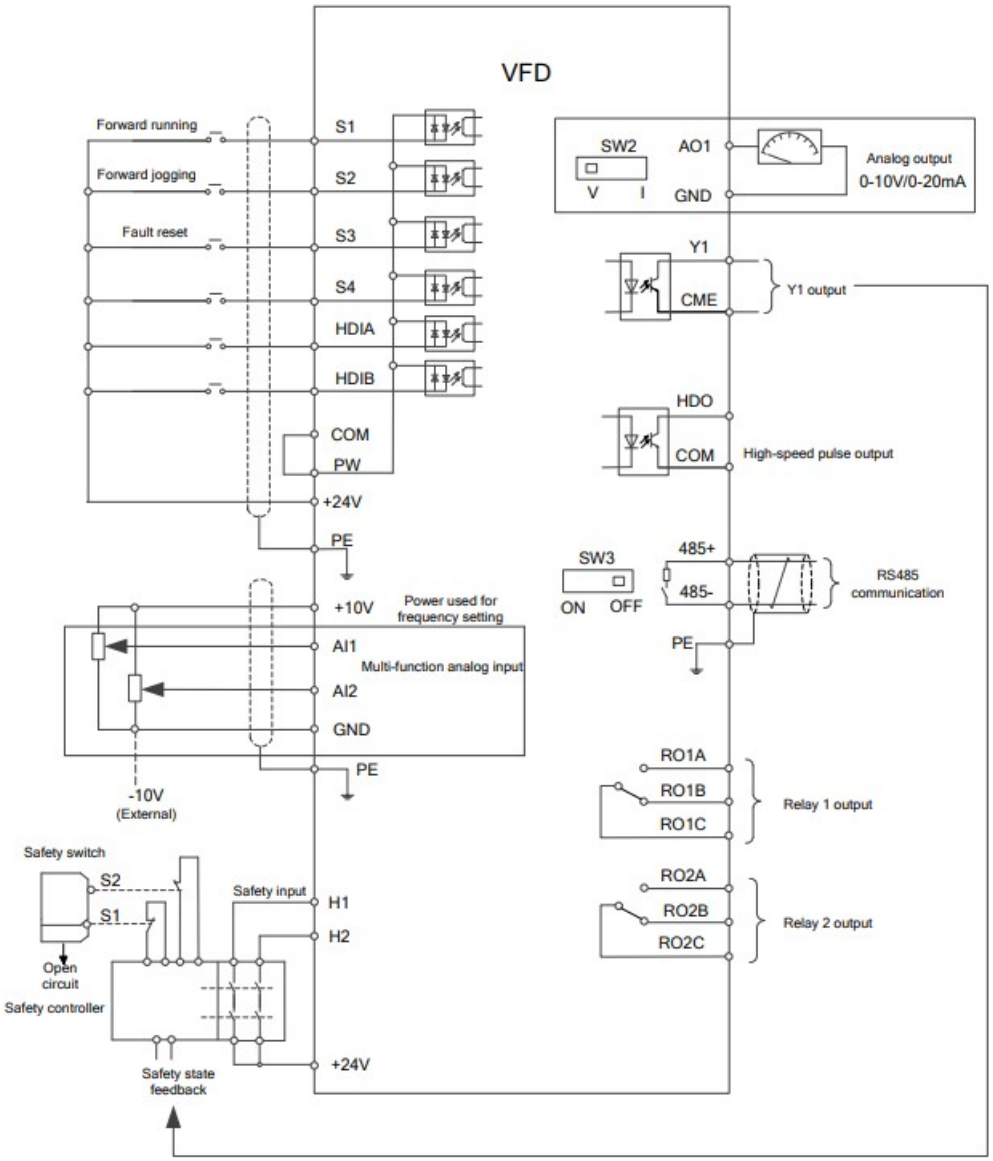


## Packaging size

| | | |
|---|---|---|
| Height | 675 | mm |
| Width | 470 | mm |
| Depth | 575 | mm |
| Weight | 52 | Kg |


Universal Motors S.A.
Rua Comendador Brandão, 484
4495-375 Póvoa de Varzim
geral@universalmotors.pt
TEL.: 252 299 080

Universal Motors UK, Ltd
Unit E2, Meltham Mills Road
West Yorkshire HD9 4AR
enquiries@universalmotors-group.co.uk
TEL.: +44(0) 1484660222

Universal Motors SL
C/La Habana n.6 nave 4 PI Camporroso
28806 Alcala de Henares
info@universalmotors-group.es
TEL.: 918 864 213